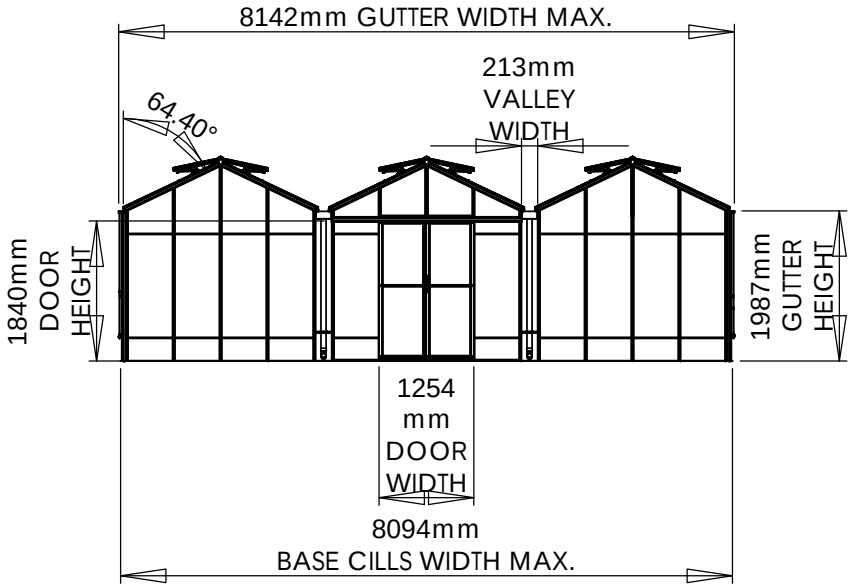

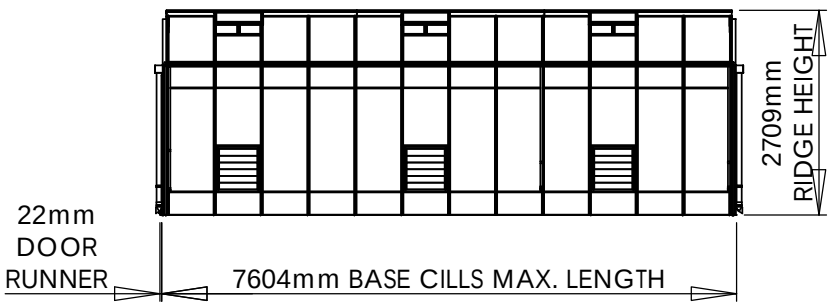

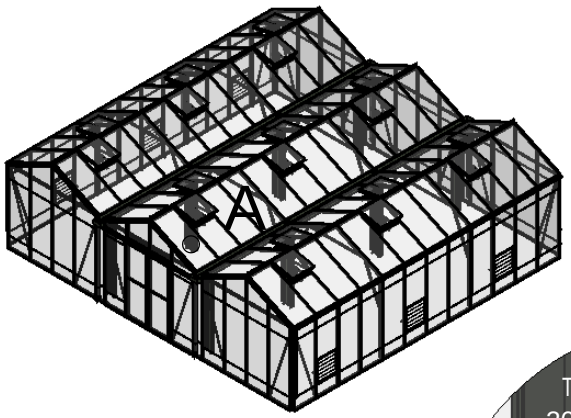

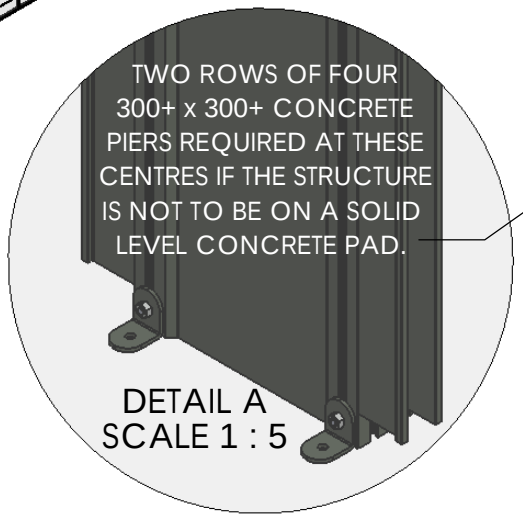

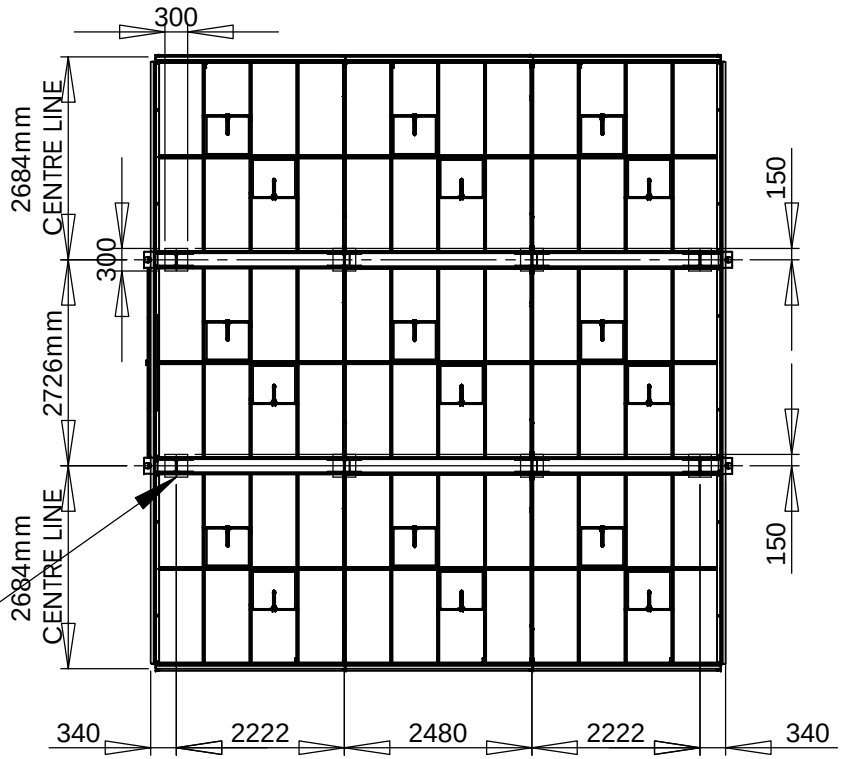

0 1000mm
SCALE 1:100

26 X 24 REACH ROYALE TRIPLESPAN