Robinsons
ALUMINIUM GREENHOUSES

Victorian 'RUGBY' 6 Dwarf
Assembly Instructions

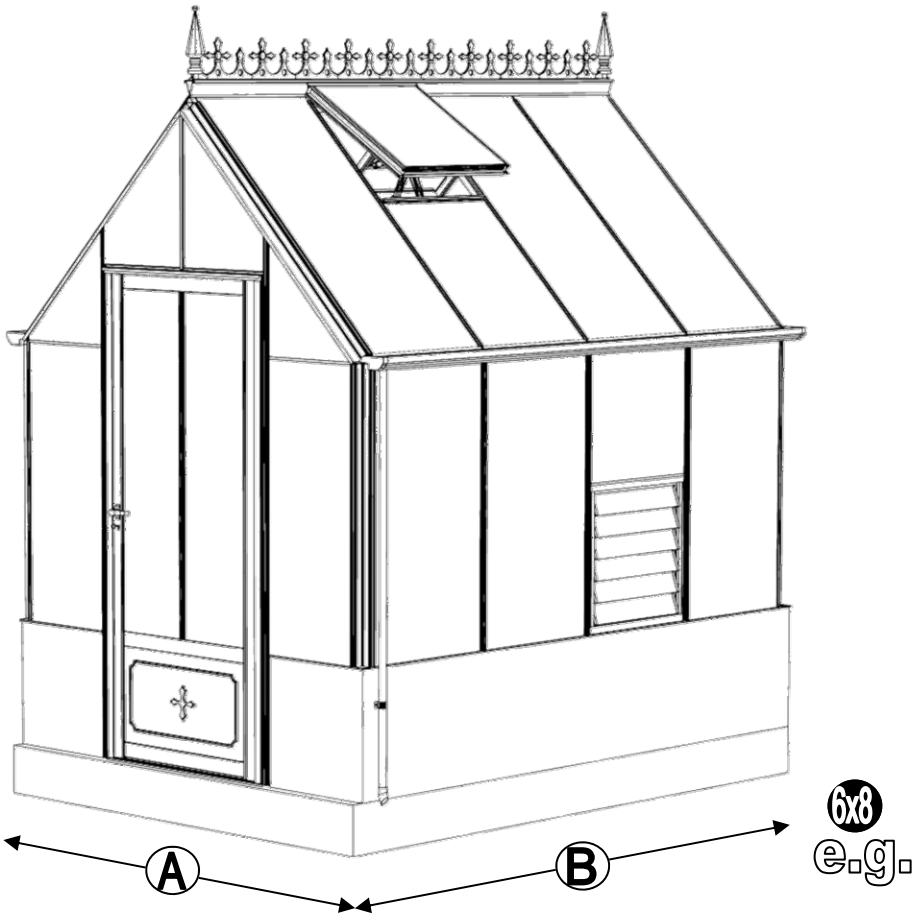

NOMINAL SIZE	A (mm)	B (mm)
6 X 6	1968	1990
6 X 8		2610
6 X 10		3230
6 X 12		3850

Issue 1.1

GB Thank you for purchasing your new Robinsons greenhouse. We recommend you familiarise yourself with the instructions and read all safety information before you commence assembly. This instruction manual is also available online at www.robinsonsgreenhouses.co.uk in our technical help section should you need to reprint it. Should you require any additional advice you can always call us on 01782 385409.

These instructions are divided into sections highlighted by a white number/letter on a black background at the bottom corner of most pages (see opposite page for details); **part lists**, **B**-base, **P**-preparation, **1**-sides, **2**-front gable, **3**-rear, **4**-joining the four sides together, **5**-louvre, **6**-roof, **7**-vent, **8**-glazing, **9**-vent attachment, **10**-door attachment, **11** anchoring down, **12** finishing touches, **13** optional shelf, **14** optional staging. If you need to contact us for assistance please refer to the relevant section/s. If your building is longer than 12', i.e. has an extension then please also refer the separate extension manual.

Safety Warning

- Glass and aluminium can potentially cause injury. Please ensure you wear protective goggles, gloves, headgear and suitable footwear when assembling and glazing the building.
- Please remember that glass is fragile and should be handled with extreme care. Always clear up and dispose of any breakages immediately.
- Do not assemble the greenhouse in high winds.
- For safety reasons and ease of assembly, we recommend that this greenhouse is assembled by a minimum of two people.
- Please clear all lying snow from the greenhouse roof as it can cause the roof to buckle or collapse.

Site Preparation

- When selecting a site for your greenhouse, it is vital that you choose as flat and level an area as possible.
- A concrete or slabbed base will provide the most solid foundation for your greenhouse.
- IMPORTANT: Do **not** fix your building down until the building is fully assembled, including glazing.
- Avoid placing your greenhouse under trees or in other vulnerable locations.
- To minimise the risk of wind damage, try to select as sheltered a site as possible, e.g. beside a hedgerow or garden fence.

Additional Considerations

- Please bear in mind that assembling your greenhouse can be time consuming. You may need to spread the construction over two or more days. We recommend that you avoid leaving the building partially glazed. If you ever have to leave your greenhouse half assembled and not anchored down, weigh it down with slabs or bags of sand to stop the wind moving it.
- You will find it helpful to prepare a large, clean and clear area in which to work in. A garage floor or flat lawn area is ideal.
- If you have arranged for someone to install your greenhouse for you, please check that all components are included. Most parts are numbered and can be identified by a stamped number (without the 'D') or removable label. Alternatively, the components can be identified by lengths detailed in the packing list (see diagram below).
- Anchoring down your greenhouse should be the final stage of construction (including glazing).
- Once installed your greenhouse requires little maintenance, but to maintain the smooth running of your door(s) WD40 or similar can be applied to the door wheels and lower door guides.

Guarantee

- Your new Robinsons greenhouse is guaranteed for 10 years against faulty manufacture of the framework. This does not include glazing, moving parts, accidental damage or wind damage.

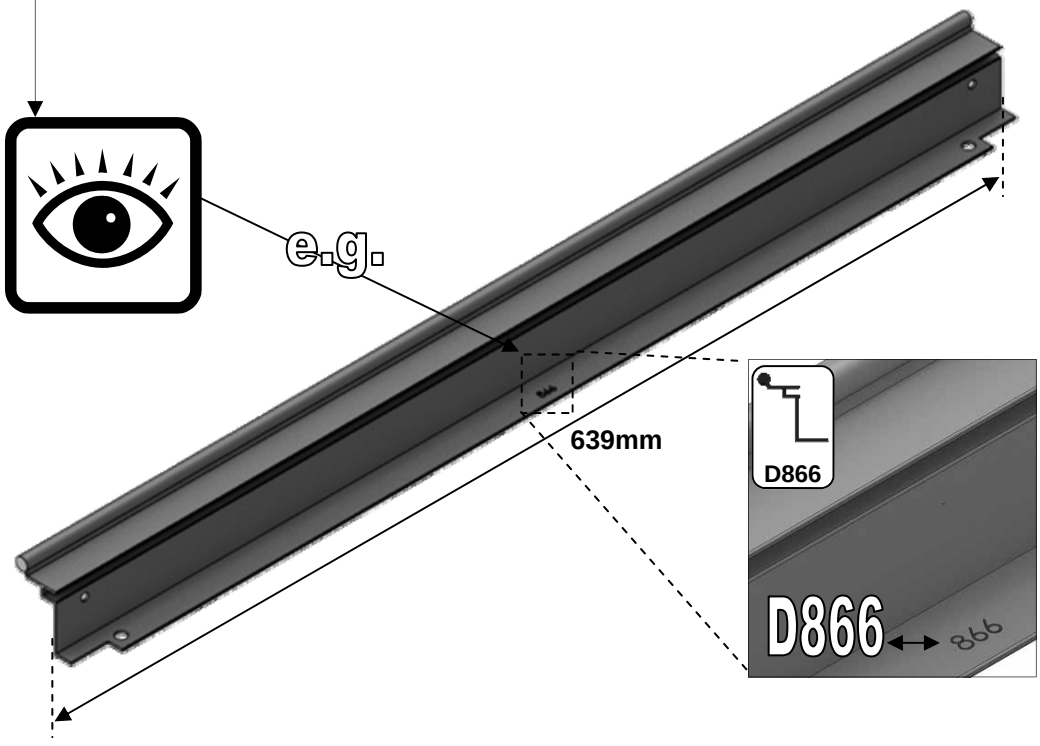

KEY SYMBOL	KEY DESCRIPTION
	EXTERNAL VIEW
	INTERNAL VIEW
	THINK
	THIS SECTION RELATES TO ANOTHER (e.g. 1 to 5)
	CORRECT
	DO NOT FIX DOWN!
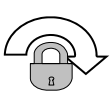	**TWIST TO LOCK**
	TIGHTEN
	PUSH AND HOLD
	CUT TO LENGTH

SECTION No	TITLE	ASSEMBLY SYNOPSIS: IMPORTANT INFORMATION / CONSIDERATIONS
	PARTS LIST	Most components should have a 'D' code punched into their metal surface. Identify and separate all like for like components prior to assembly. The 'parts list' also separates parts into the various sections 1 - 12 shown below. Parts can also be identified by their profile pictures and stated lengths etc..
B	BASE	Base dimensions and recommendations. Ensure that your base is level as this will make assembly of the building, especially the glazing of the roof much more straight forward. Please be aware that the hinge door on your greenhouse opens inwards, make sure that there will be no interference between the door and the foundations.
P	PREPARATION	Tools required. IMPORTANT: Use WD40 or similar in the glazing bar channels and insert the black glazing rubber prior to frame assembly.
1	SIDES	Take the side glazing bars 'D609' with the rubber inserted and the diagonal braces 'D604', use 10mm bolts to join them to the gutter and 15mm bolts to the cills (note how the head of the bolt slides into each glazing bar during construction). Please also remember to slide in your 22mm bolts for attaching the decorative eave spandrels 'DV100' in section 5.
2	FRONT	Again insuring that the gable framework is rubbered-up follow the diagrams to assemble each end of the building. Make sure that you have inserted the extra bolts utilised in sections 4 and 5. On the roof and side corner bars not every rubber channel will require rubber unless it is to be utilised in a partition (see separate manual and section P).
3	REAR	
4	JOINING THE FOUR SIDES	Take the two sides (1) and both gables (2 & 3) and join them together on your base. It is a good idea to tie some ladders to the sides to support them if you do not have anyone to hold them for you.
5	LOUVRE	They attach to the building during the glazing process (8) like a piece of glass with a black separator above and below them. If you are fitting an optional auto-louvre then you need to carefully drill (3mm bit) out the rivets which mount the handle to the frame. You can then either utilise those holes or create more to mount the unit.
6	ROOF	Attach the ridge and then the rubbered-up roof bars ensuring that they are fully butted up to the ridge and down onto the gutter. Attach your cresting before you glaze the building to give yourself more room to work. Utilise the 22mm bolts slid into the side (section 1) and roof bars to attach your DV100 and DV101 spandrels.
7a	VENT	Once the vent is glazed add silicone to the vent sides and top. Stand the vent/s on their hinge (vent top) and then leave the silicone to set.
7b	VENT SLAM	The slam bar 'D079' can be moved up and down between the roof glazing bars so that it can be butted down onto the pane of glass beneath, the autovent will be attached to it later on (9).
8	GLAZING	Layout the bar cappings and covers around the building like a sundial checking that all is present and correct. You can also place the roof cappings in the gutters so they are closer to hand. The glass in the ends has to bevel on the black separator strip, this bevelling action allows the glass to tuck underneath the roof corner canopy. Use the capping and the self tapping screws to then hold the glass in place. The covers then enclose the screw heads giving a neat finish. It is a good idea to glaze two roof sections first to ensure the building is square followed by two side sections to ensure the building isn't leaning. IMPORTANT: On the roof sections please make sure that you place a screw around 25mm / 1" from the bottom of each capping strip (create a hole in the plastic if required) and that the screws are nice and tight to avoid any glass slippage.
9	VENT ATTACHMENT	Take the assembled vent and slide the vent hinge 'D866' into the end of the ridge allowing the vent the pivot open and closed. Vent stops go either side of the vent to stop any lateral movement (so insert stop / vent / stop). Attach the Bayliss XL autovents.
10	DOOR ATTACHMENT	Your door comes pre-constructed and locked minus the handles and their pivot pin but now it needs to be mounted to the front end of your building. Utilise the 'DV522' plates and twist in crop headed bolts to join the door and its frame to the building (pinch the door frame against your long front verticals whilst tightening your 'DV522' plates to ensure that there is no gap). If you are struggling to eradicate the gap between the door frame and verticals then some silicone can be carefully applied to the area to create a vertical seal. Be careful not to lock yourself in the building and to avoid damage do not open the door until it is attached to the front gable. Getting the door to swing perfectly without dropping or rubbing on the ground may require some small but vital adjustments. You may also need to insert a packer underneath the door frame hinge to increase ground clearance. Part 'DV275' canopies the door frame top hiding the clearance space at the top of the door. The door can only be made to swing inwards. IMPORTANT: Please do NOT let the door slam open or closed as it is likely to cause damage to the door and the frame. Please twist the handle to open and close. Please also be aware that your door KEYS (3 provided) are unique to the building so they should not be stored together.
11	ANCHORING DOWN	Now that the greenhouse is finished and the door and vent/s are operating without interference then you need to anchor the building down using 2" rawl plugs and screws. Use a 7mm masonry bit in a hammer drill to create the holes.
12	FINISHING TOUCHES	Now that the main body of the structure is complete you can add; downpipe fittings, eave bungs, gutter stop ends. It is also important to carefully apply some silicone to the internal eaves corners and external and internal ridge corners to minimise the chance of water entering the structure.
13	OPTIONAL SHELVING	Robinsons integral cantilever staging and shelving attaches to the inside of the greenhouse frame using either square head bolts (insert four into each side glazing bar 'D609' during construction of the sides (1)) or rectangular 'crop head' bolts which can be fitted retrospectively (both sets of bolts accompany the shelving/staging). This system allows the height of either the staging or the shelf to be set at an operator specific height. Commonly the staging brackets are set 900mm from the cills though you can alter this to suit the end user/s. The aluminium shelf / staging slats come in two lengths; (4'):1240mm 'D2002' and (6'):1860mm 'D2003'. These slats can combine to create any length of staging required, i.e. 4'+6' = 10' etc...
14	OPTIONAL STAGING	

6' Dwarf Victorian

Section Ref	Part No.	Section	Size (mm)	6 6	6 8	6 10	6 12
1	D043		1894	2			
	D021		2514		2		
	D022		3134			2	
	D023		3754				2
	DV213	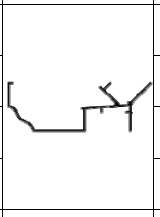	1897	2			
	DV210		2517		2		
	DV211		3137			2	
	DV212		3757				2
	D604		1316	4			
	D609		1160	4	6	8	10
	RUBBER		1000 (1m)	10	14	19	24
	D174		N/A	4	4	8	8

Section Ref	Part No.	Section	Size (mm)	6 6	6 8	6 10	6 12
2 + 3	DV104		N/A	4			
	DV105		N/A	2			
	RUBBER		1000 (1m)	37			
	D163		90	2			
	D174		N/A	5			

Section Ref	Part No.	Section	Size (mm)	6 6	6 8	6 10	6 12
5	DV204		1897	1			
	DV201		2517		1		
	DV202		3137			1	
	DV203		3757				1
	DV253		1345	4	6	8	10
	RUBBER		1000 (1m)	11	17	22	27

Section Ref	Part No.	Section	Size (mm)	6 6	6 8	6 10	6 12
2 + 3	DV230		1984	1			
	DV301LH		537	1			
	DV301RH			1			
	D608	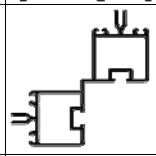	1160	4			
	DV233LH		2173	1			
	DV233RH			1			
	DV308LH		1657	1			
	DV308RH			1			
	DV060		2091	1			
	DV269		468	2			
	DV272		1840	1			
	DV300		1193	4			
	DV250LH	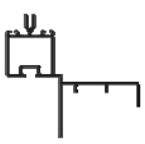	1345	2			
	DV250RH			2			
	D671		610	1			
	DV275	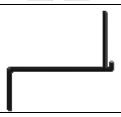	904	1			

Section Ref	Part No.	Section	Size (mm)	6 6	6 8	6 10	6 12
6	D866		639	2	2	4	4
	D863L		613	2	2	4	4
	D863R		613	2	2	4	4
	D862		593	2	2	4	4
	D079 PLUS FLUFF		590	2	2	4	4
	D114		N/A	4	4	8	8
	D220 PLUS FS6060 SCREW		N/A	4	4	8	8
	D205		N/A	4	4	8	8

6' Dwarf Victorian

Section Ref	Part No.	Section	Size (mm)	6 6	6 8	6 10	6 12
8	1	D618		1144	4	6	8	10
	2 / 10	D662		600	1			
	3	DV409		2091	1			
	10	DV479		1384	1			
	3	DV608L/R		1657	1 + 1			
	2	DV633L/R		2173	1 + 1			
	5	DV653		1378	4	6	8	10
	2/3	D610		1160	4			
	1	D620		1144	4			
	5	DV650		1345	4			
	2/3	D614		1162	4			
	1	D619		1144	8	10	12	14
	2 / 10	D666		602	1			
	3	DV436		2091	1			
	10	DV480		1384	1			
	3	DV609L/R		1657	1 + 1			
	2	DV634L/R		2173	1 + 1			
	5	DV656		1378	8	10	12	14
10	D522	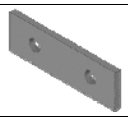	N/A	10				
12	D119		N/A	1				
	DV120	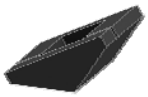	N/A	4				
	D841		N/A	2				
	D211	PIPE	1625	2				
	D207		N/A	2				
	D214		N/A	2				
	D201		N/A	2				
	D208	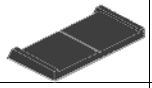	N/A	2				
	DV219		N/A	2				
	DV218	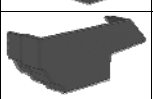	N/A	2				

	Size (mm)	6 6	6 8	6 10	6 12
MAIN FRAME QUANTITIES VENTS / DOORS etc SEPERATE					
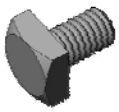	SYBOLM6X11 10mm	62	68	74	80
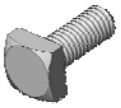	SYBOLM6X15 15mm	25	27	29	31
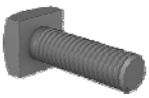	SYBOLM6X22 22mm	24	36	48	60
	SYNUTM6 M6 NUT	111	131	151	171

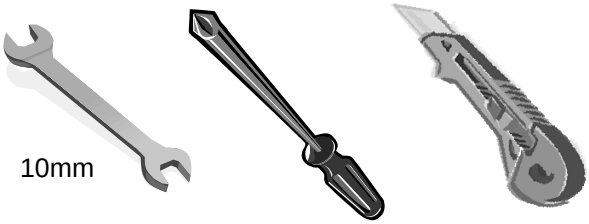

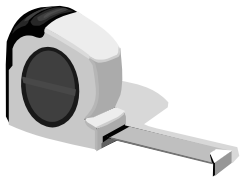

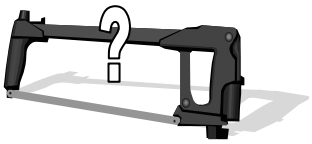

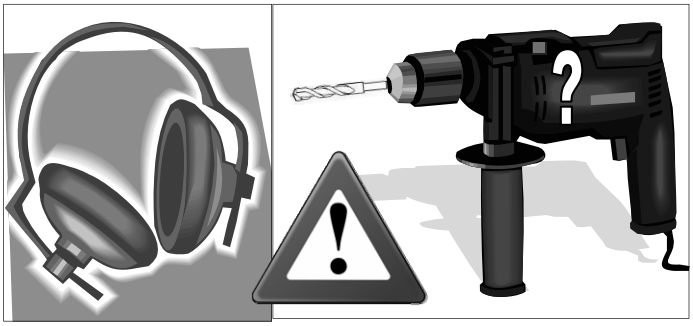

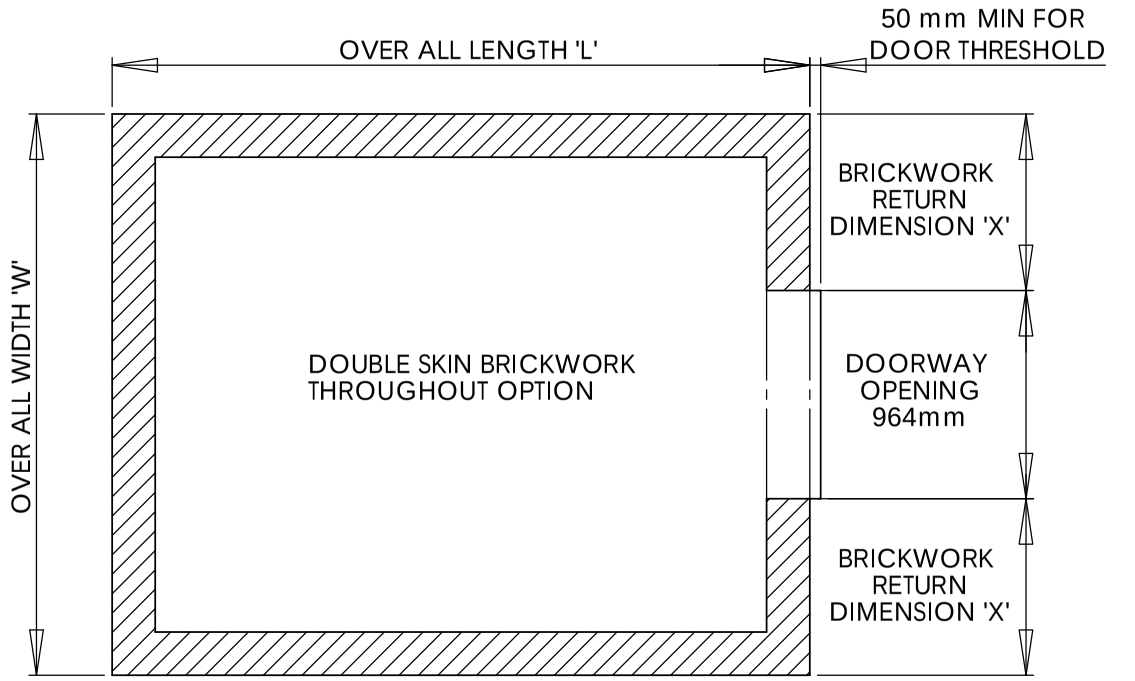

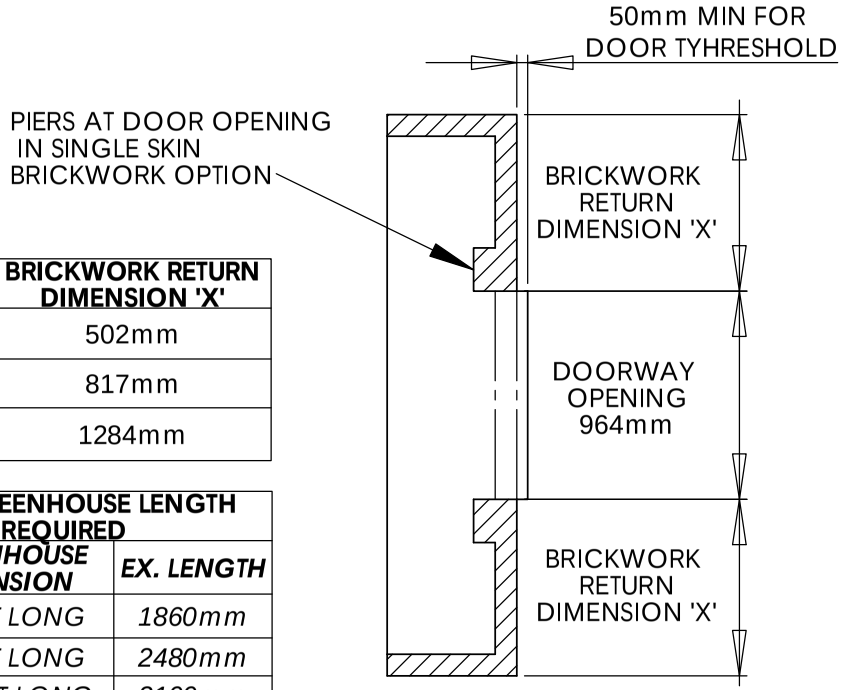

GREENHOUSE TYPE	OVER ALL WIDTH 'W'	BRICKWORK RETURN DIMENSION 'X'
RUGBY (6ft WIDTH)	1968mm	502mm
RUSHMOOR (8ft WIDTH)	2598mm	817mm
ROEDEAN (11ft WIDTH)	3532mm	1284mm

OVER ALL LENGTH 'L' = BASIC GREENHOUSE LENGTH + EXTENSION LENGTH IF REQUIRED			
BASIC GREENHOUSE	LENGTH	*GREENHOUSE EXTENSION*	*EX. LENGTH*
6ft LONG	1990mm	*6ft EXT LONG*	*1860mm*
8ft LONG	2610mm	*8ft EXT LONG*	*2480mm*
10ft LONG	3230mm	*10ft EXT LONG*	*3100mm*
12ft LONG	3850mm	*12ft EXT LONG*	*3720mm*

GUIDANCE NOTE FOR ROBINSONS DWARF WALL GREENHOUSES.

FOOTINGS

CONCRETE STRIP FOOTINGS SHOULD BE A MINIMUM OF 400mm WIDE X 200mm DEEP. IF THE SITE IS ON MADE UP GROUND IT IS IMPORTANT THAT THE FOOTINGS ARE CUT INTO THE COMPACTED GROUND BELOW. WHERE THE GROUND IS LIABLE TO MOVEMENT SUCH AS HEAVY CLAY OR LOOSE SANDY SOIL REINFORCING SHOULD BE ADDED TO THE CONCRETE FOOTINGS.

WALLS

IT IS MOST IMPORTANT THAT THE BRICKWORK IS IN ACCORDANCE WITH THE DIMENSIONS PROVIDED AND IS SQUARE, LEVEL AND UPRIGHT, THE DIAGONAL MEASUREMENTS SHOULD BE EQUAL.

WALLS CAN BE EITHER DOUBLE OR SINGLE SKIN.

THE TOP COURSE OF BRICKS SHOULD BE LAID FROG DOWN. IF ENGINEERING BRICKS ARE USED FOR THE TOP COURSE PLEASE ENSURE THEY ARE SOLID NOT CELLULAR (WITH HOLES THROUGH THEM) OR FIXING DOWN OF THE GREENHOUSE WILL BE A PROBLEM. BRICKS SHOULD BE A GOOD QUALITY STOCK BRICK, SAND FACED FLETTON TYPE BRICKS ARE NOT SUITABLE.

GABLE DOOR OPENING

THE DOOR THRESHOLD REQUIRES BRICK WORK ACROSS THE OPENING WHICH SHOULD BE LEVEL WITH THE FINISHED FLOOR LEVEL (F.F.L) OF THE GREENHOUSE.

THE OPENING FOR THE DOORWAY AND THE HEIGHT TO THE TOP OF THE WALL FROM THE THRESHOLD LEVEL REQUIRE THE HIGHEST ACCURACY AND ARE MOST IMPORTANT SO THAT THE DOOR FITS THE APERTURE CORRECTLY. PLEASE ALSO BE AWARE THAT THE DOOR OPENS INWARDS AND THEREFORE THE FOUNDATIONS NEED TO AVOID ANY DOOR INTERFERENCE.

IF SINGLE SKIN WALLS ARE USED THEN PIERS SHOULD BE FORMED AT THE DOOR OPENING.

IN ORDER TO SUPPORT THE OUTER EDGE OF THE DOOR THRESHOLD THERE MUST BE A PROJECTION OF BRICKWORK / CONCRETE INFRONT OF THE DOOR END WALLWITH A MINIMUM WIDTH OF 50mm. THIS NEEDS TO BE LEVEL WITH THE DOOR THRESHOLD OPENING.

Property of 'Robinsons Greenhouses' © 2014

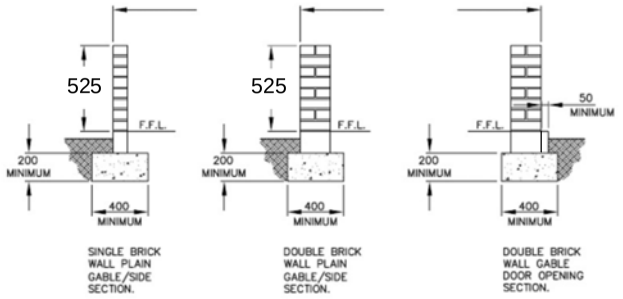

TITLE:

ROBINSONS VICTORIAN DWARF WALL RANGE

THIS PLAN APPLIES TO GREENHOUSE WITH DOOR AT ONE END ONLY!

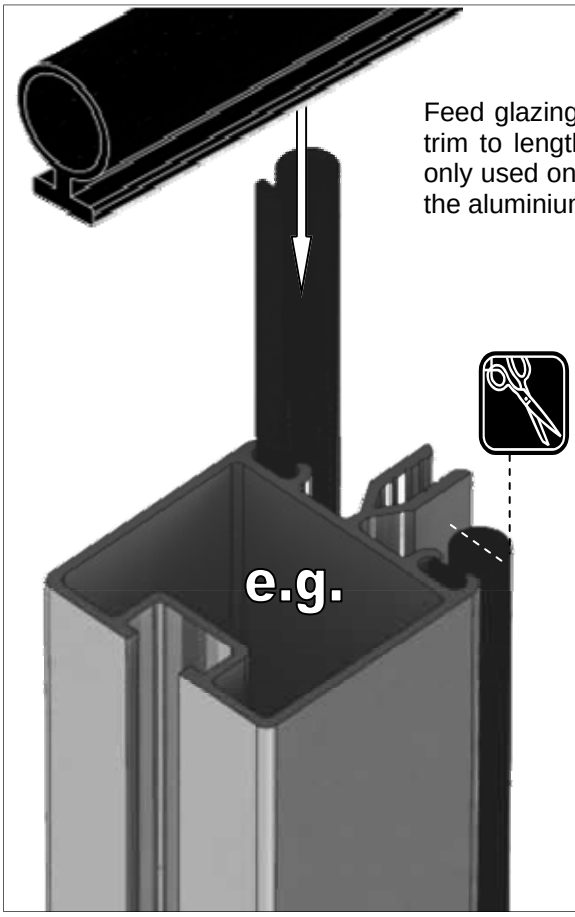

Feed glazing rubber into each glazing bar and trim to length. Notice that some channels are only used on a partition. Applying a lubricant to the aluminium channels will speed up insertion.

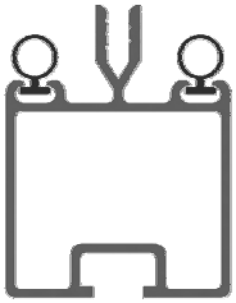

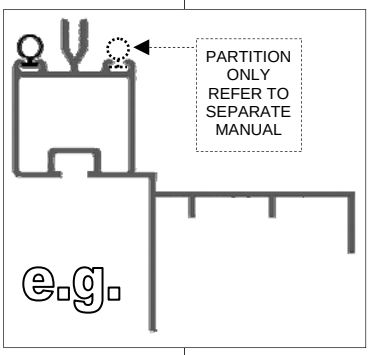

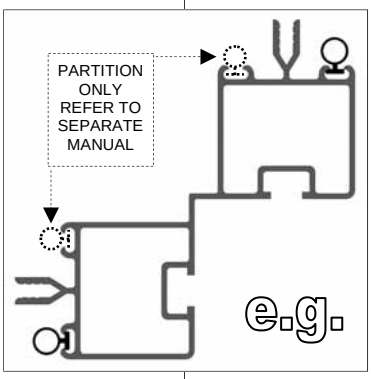

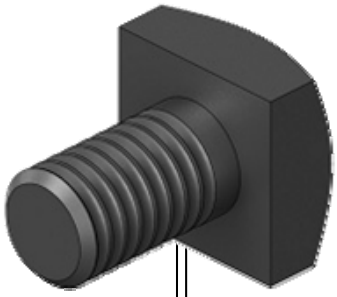

The frame is assembled by feeding square headed bolts, either 10mm or 15mm in length into the slots on glazing bars and then locating those bolts through holes in purlings and cills, etc… Twist in (rectangular) crop headed bolts are also used towards the end of construction to attach components to the frame when the glazing bar slots are no longer exposed at the ends.

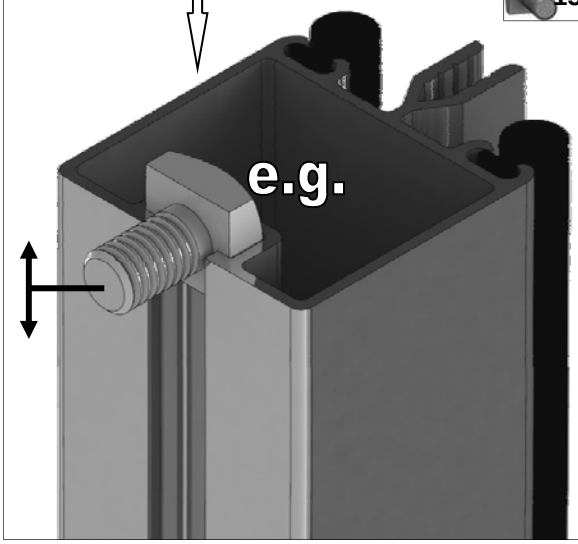

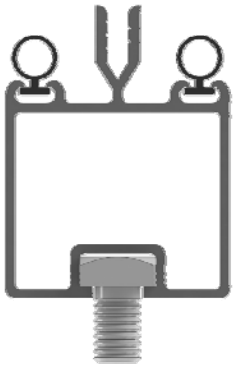

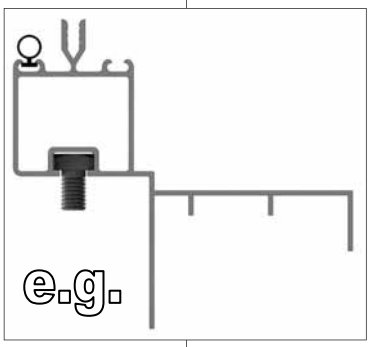

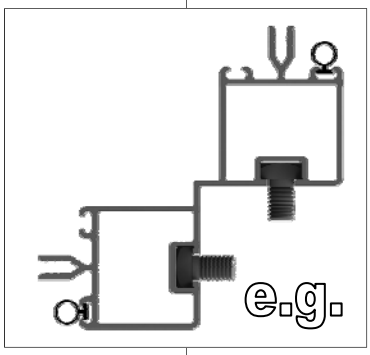

P

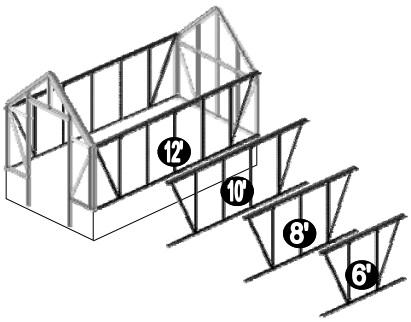

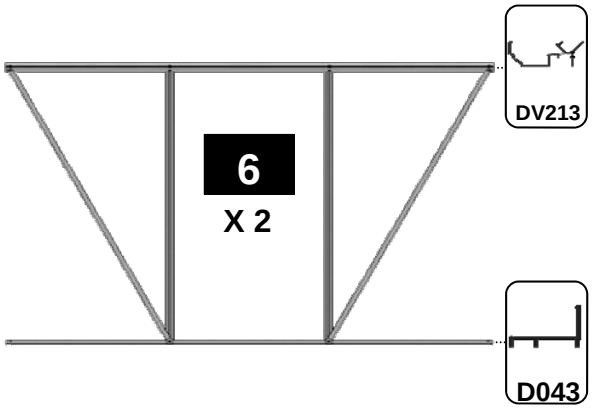

6 X 2 DWARF		
Part No	mm	Quantity
DV213	1897	2
D043	1894	2
D609	1160	4
D604	1316	4
D174		4
SYBOLM6X11		4
SYBOLM6X15		8
SYBOLM6X22		8
SYNUTM6		12
Rubber	1000	10

e.g.1

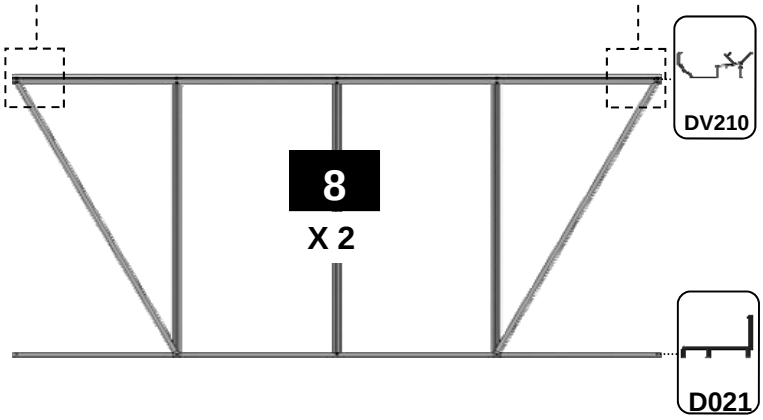

8 X 2 DWARF		
Part No	mm	Quantity
DV210	2517	2
D021	2514	2
D609	1160	6
D604	1316	4
D174		4
SYBOLM6X11		6
SYBOLM6X15		10
SYBOLM6X22		12
SYNUTM6		16
Rubber	1000	14

e.g.2

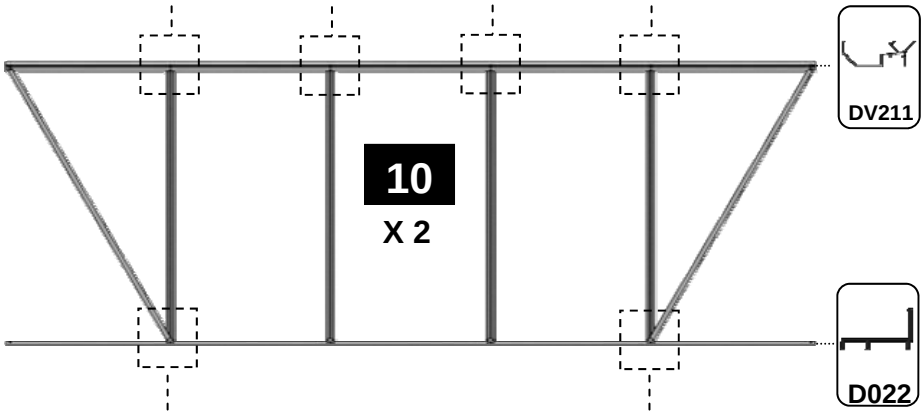

10 X 2 DWARF		
Part No	mm	Quantity
DV211	3137	2
D022	3134	2
D609	1160	8
D604	1316	4
D174		8
SYBOLM6X11		8
SYBOLM6X15		12
SYBOLM6X22		16
SYNUTM6		20
Rubber	1000	19

e.g.3

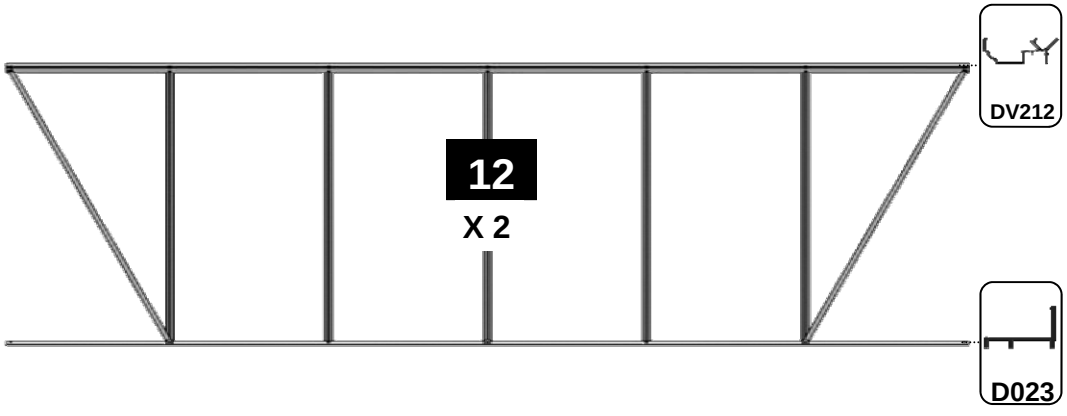

12 X 2 DWARF		
Part No	mm	Quantity
DV212	3757	2
D023	3754	2
D609	1160	10
D604	1316	4
D174		8
SYBOLM6X11		10
SYBOLM6X15		14
SYBOLM6X22		20
SYNUTM6		24
Rubber	1000	24

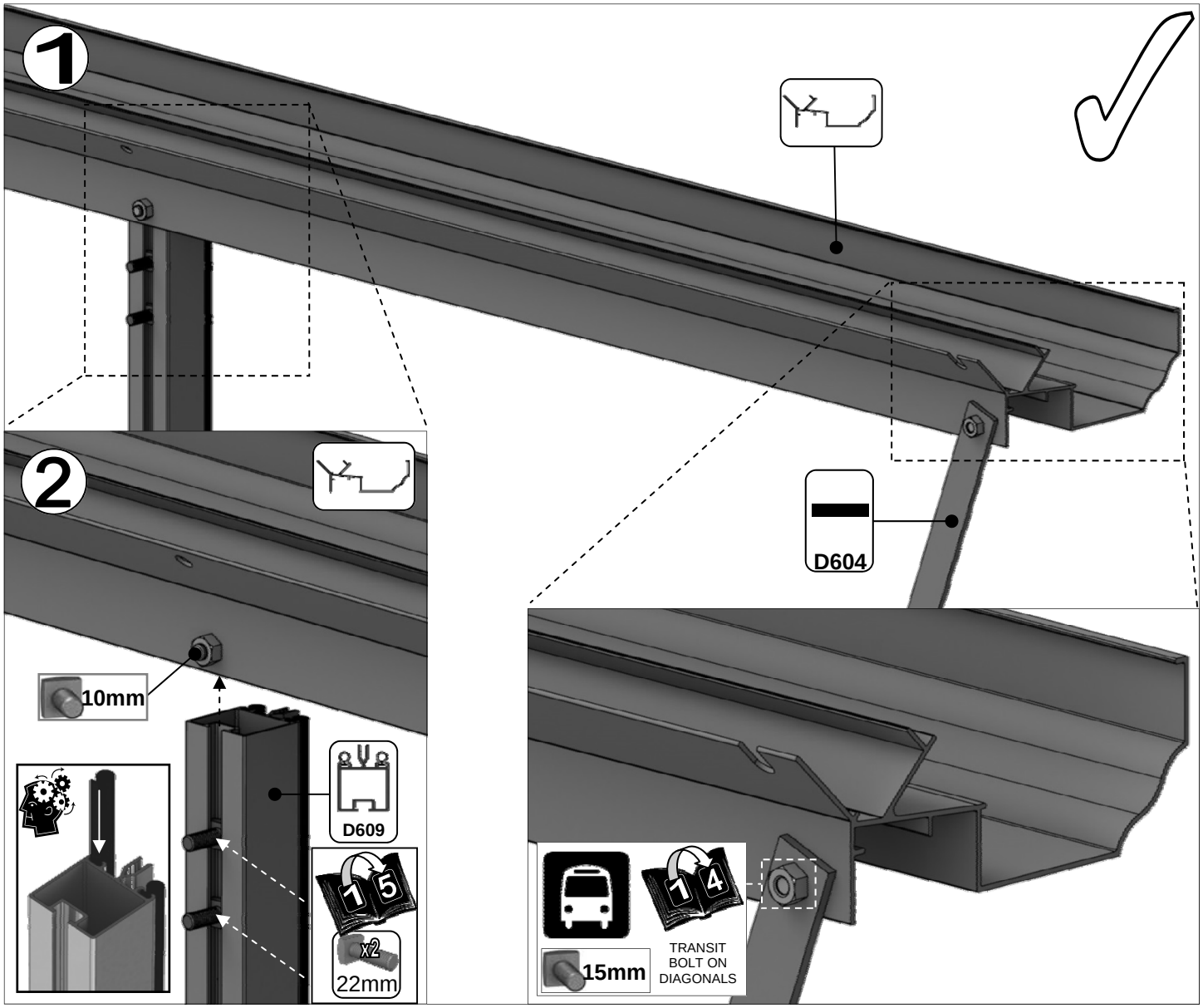
1
2
D604
10mm
D609
15
x2
22mm
14
15mm
TRANSIT
BOLT ON
DIAGONALS

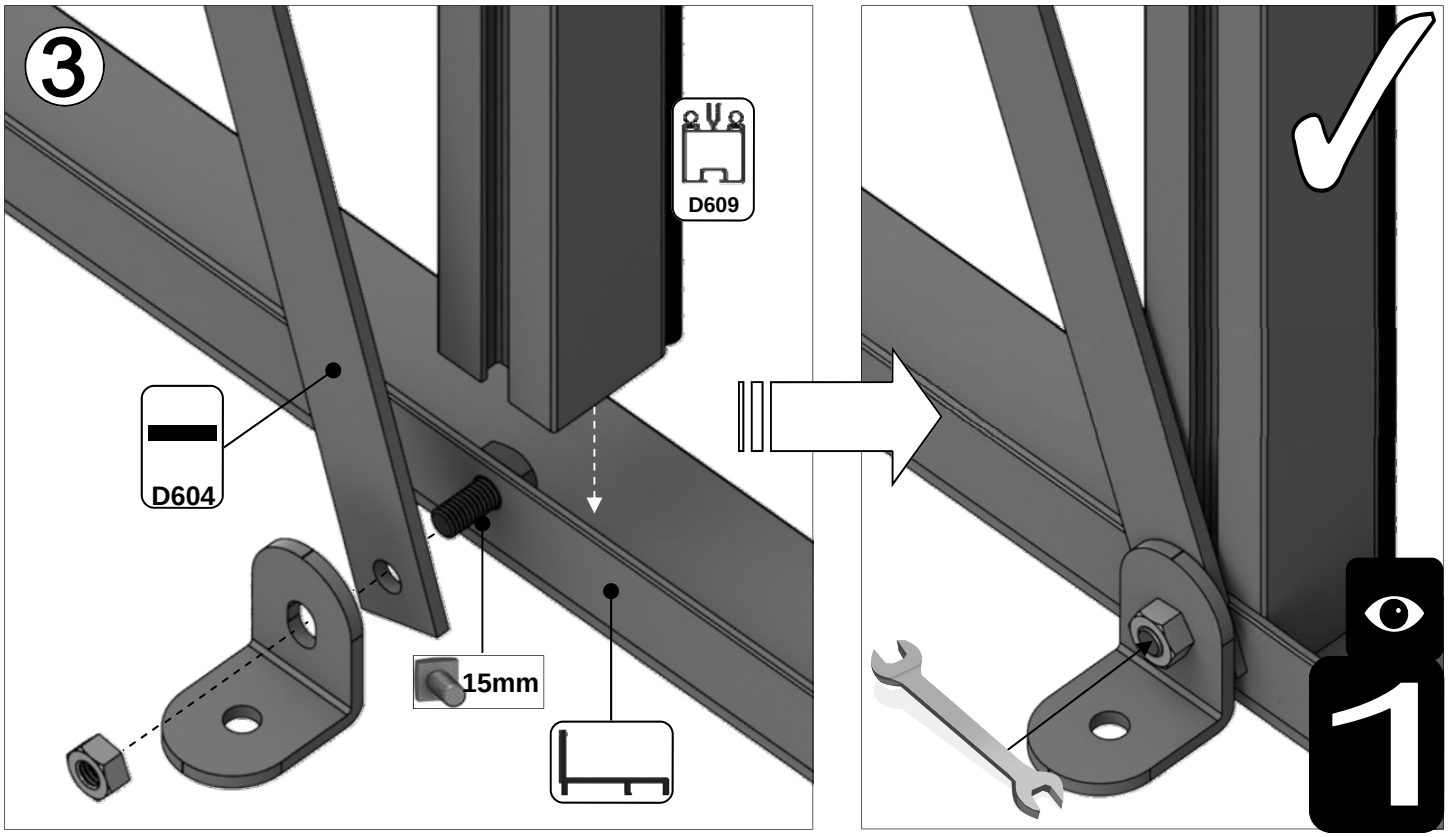
3
D609
D604
15mm
1

6’ dwarf front

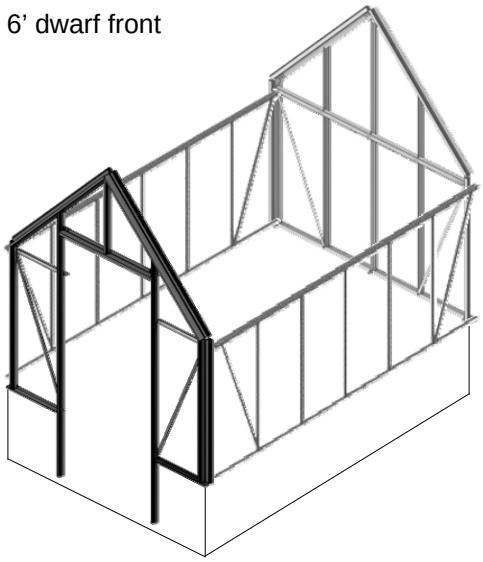

Part No	mm	Quantity
D671	610	1
D608	1160	2
DV233LH	2173	1
DV233RH	2173	1
DV250LH	1345	1
DV250RH	1345	1
DV269	468	2
DV275	904	1
DV300	1193	2
DV301LH	537	1
DV301RH	537	1

Part No	mm	Quantity
DV104		2
DV105		1
D163		2
D174		2
D227		18m
M6X10		28
M6X15		8
M6NUT		36

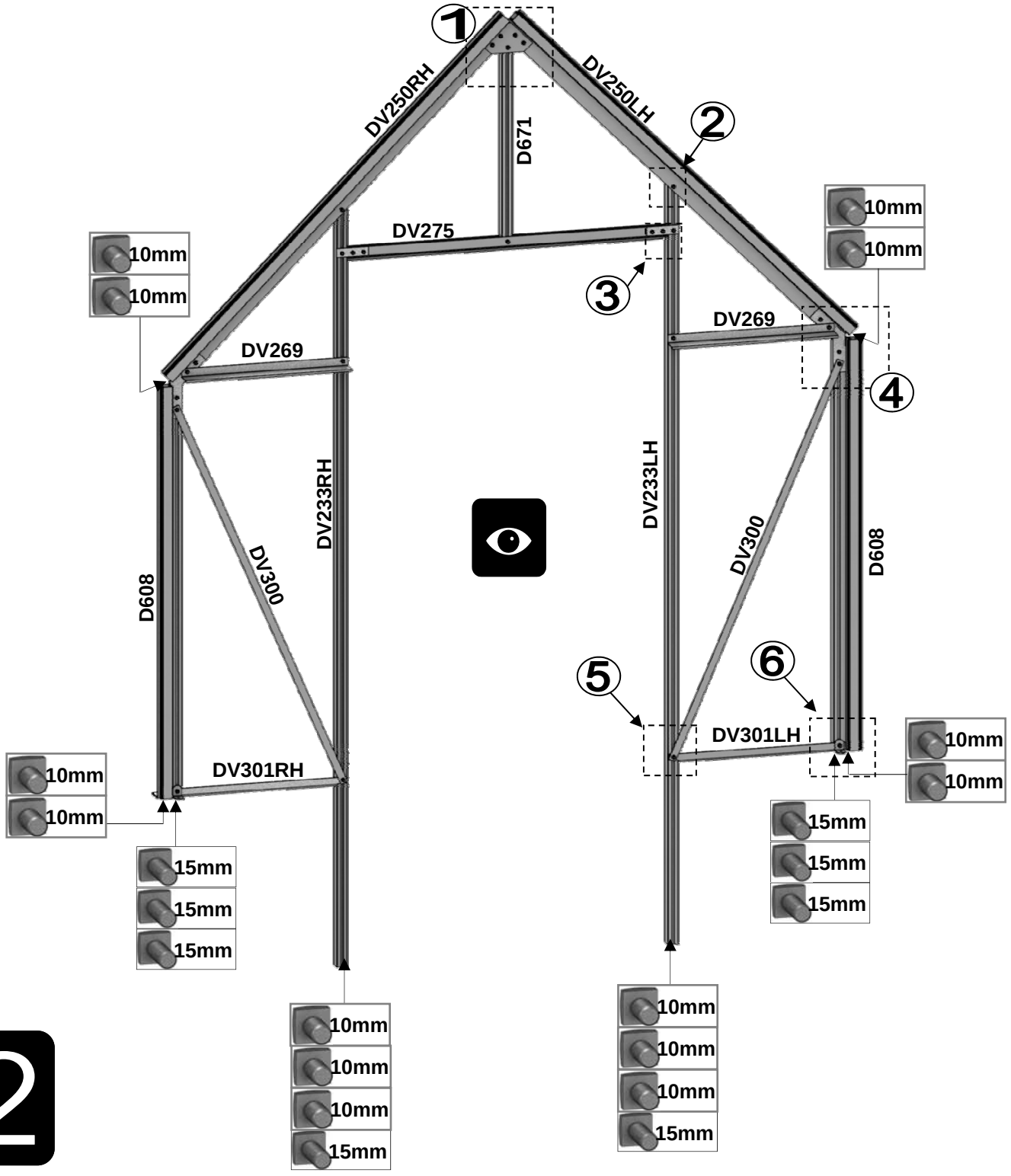

2

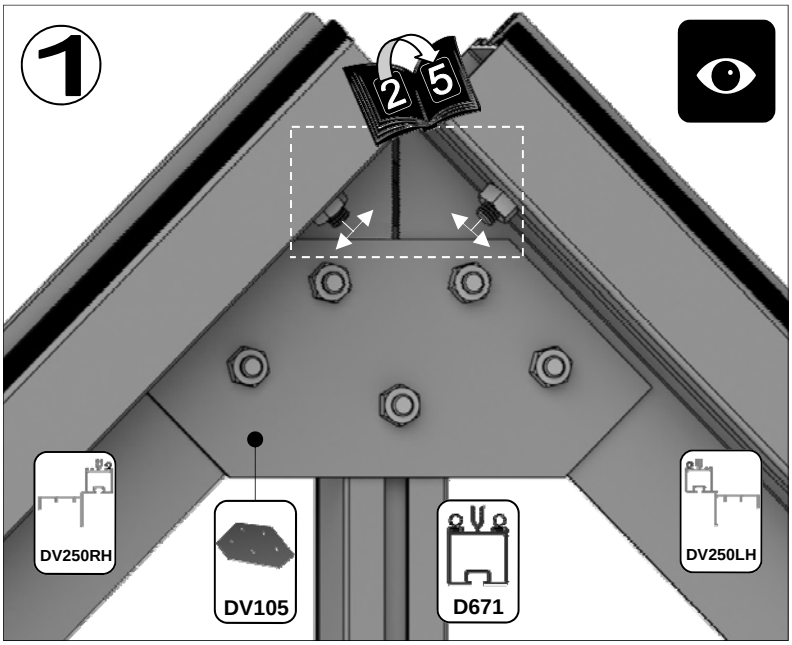
1
2 5
DV250RH
DV105
D671
DV250LH

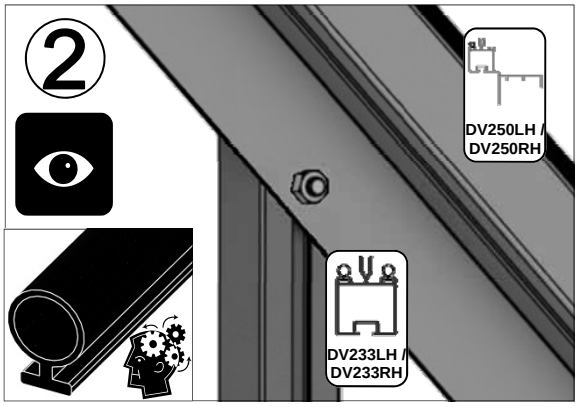
2
DV250LH /
DV250RH
DV233LH /
DV233RH

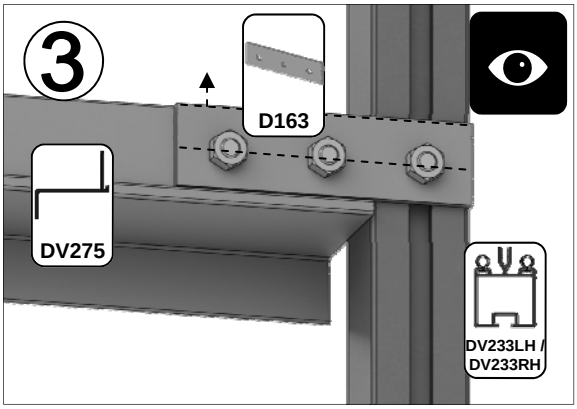
3
D163
DV275
DV233LH /
DV233RH

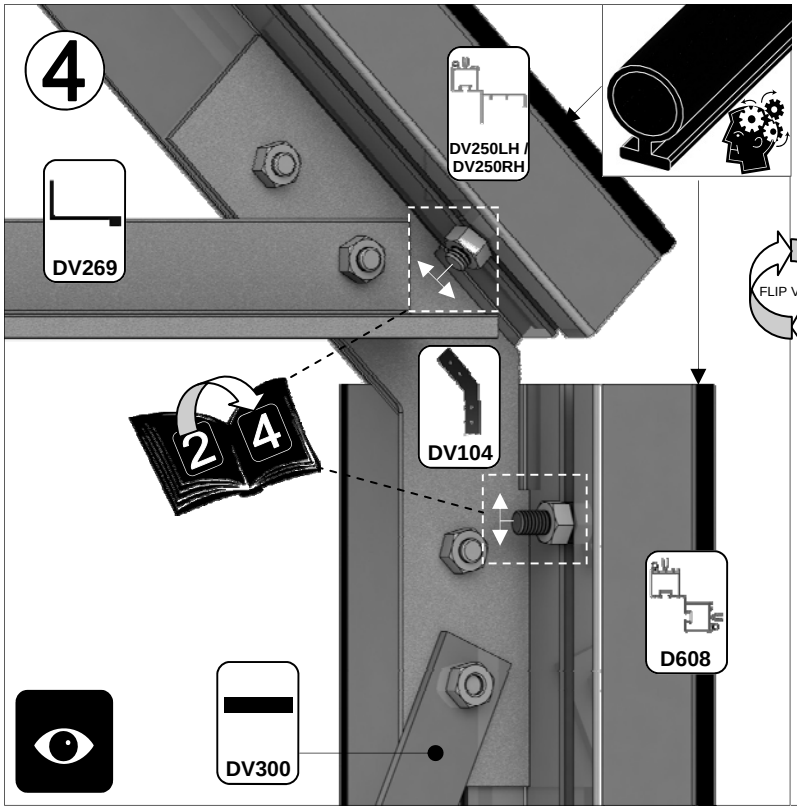
4
DV250LH /
DV250RH
DV269
2 4
DV104
D608
DV300

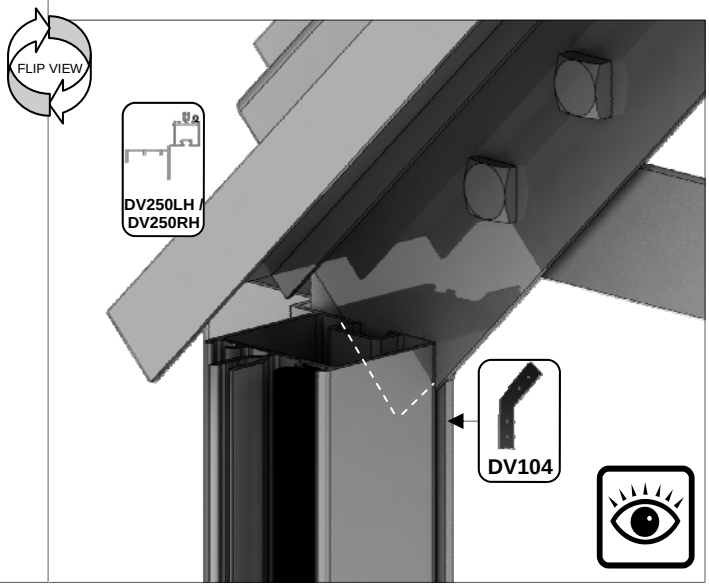
FLIP VIEW
DV250LH /
DV250RH
DV104

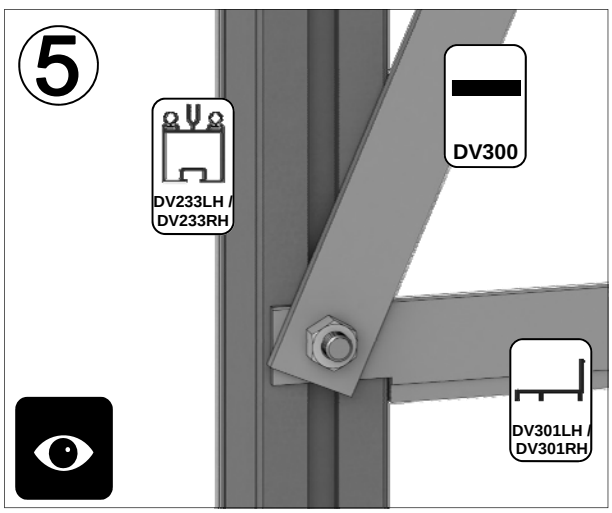
5
DV233LH /
DV233RH
DV300
DV301LH /
DV301RH

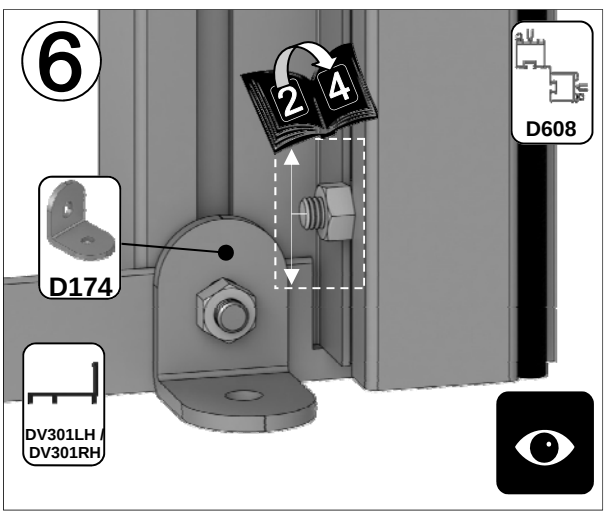
6
2 4
D608
D174
DV301LH /
DV301RH

2

6’ dwarf rear

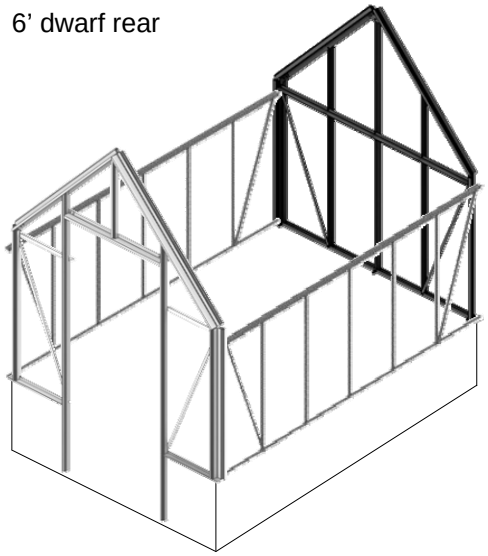

Part No	mm	Quantity
D608	1160	2
DV060	2091	1
DV230	1984	1
DV250LH	1345	1
DV250RH	1345	1
DV272	1840	1
DV300	1193	2
DV308LH	1657	1
DV308RH	1657	1

Part No	mm	Quantity
DV104		2
DV105		1
D174		3
D227		19m
M6X10		22
M6X15		9
M6NUT		31

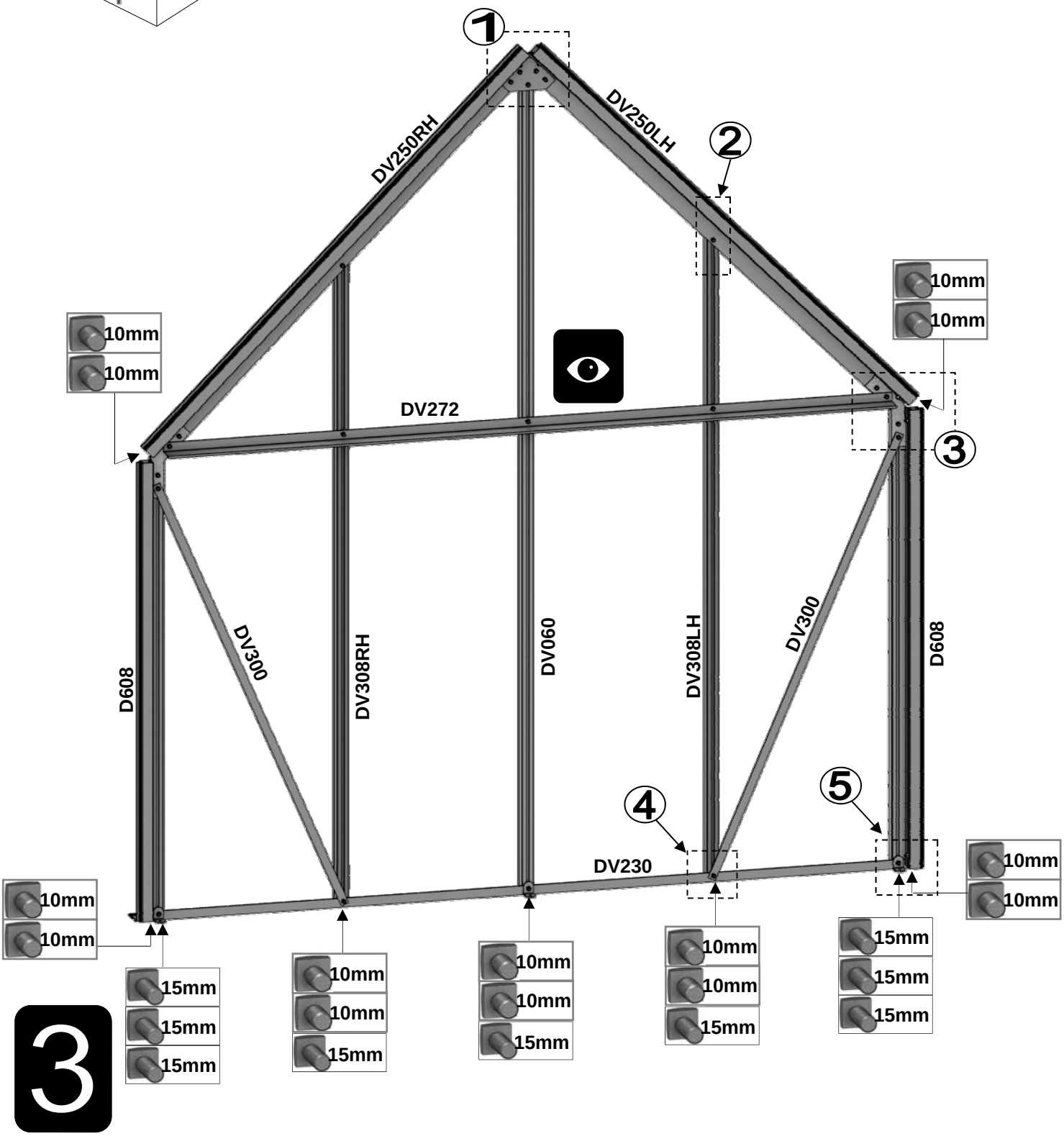

3

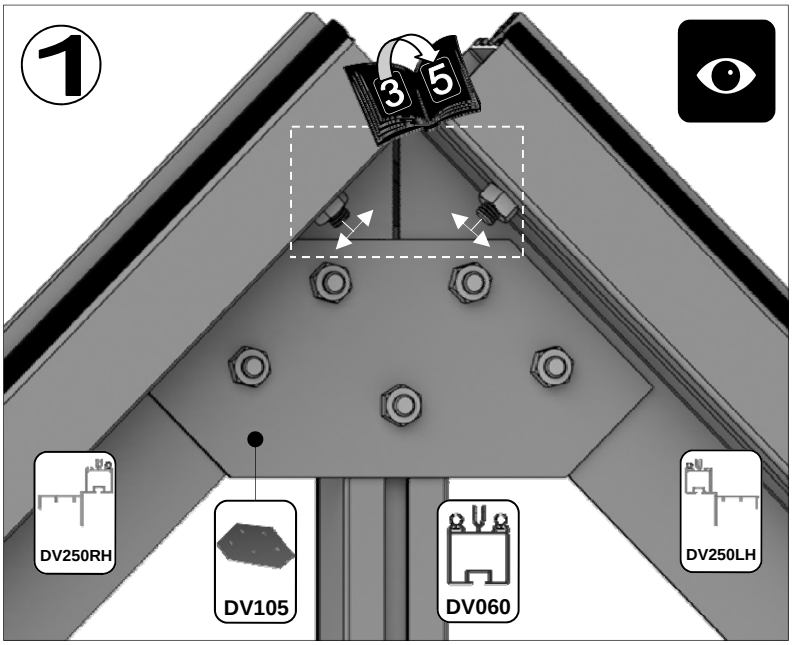
1
3
5
DV250RH
DV105
DV060
DV250LH

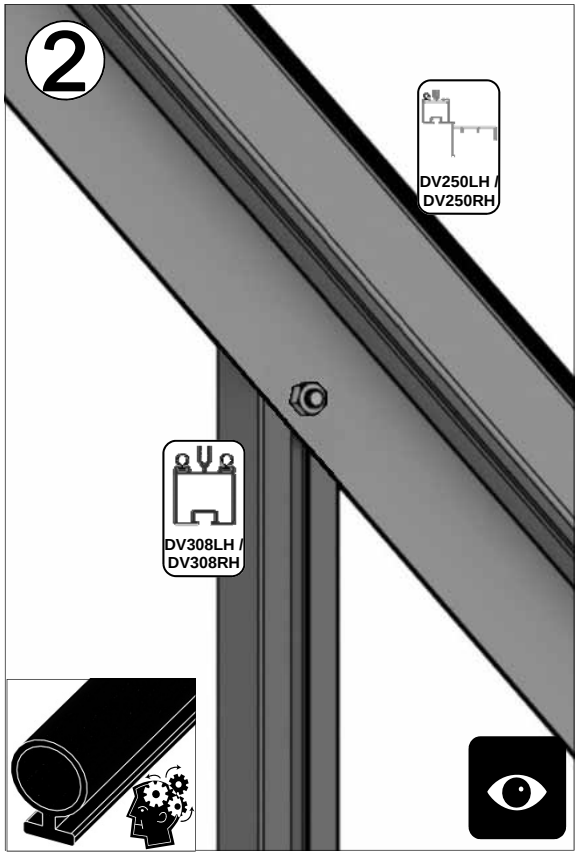
2
DV250LH /
DV250RH
DV308LH /
DV308RH

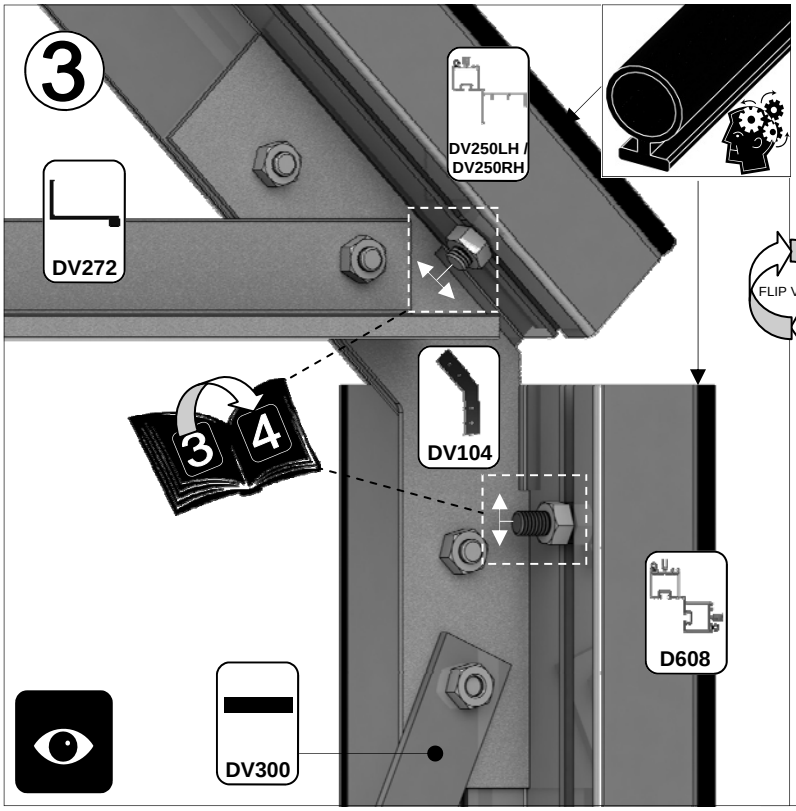
3
DV250LH /
DV250RH
DV272
3
4
DV104
D608
DV300

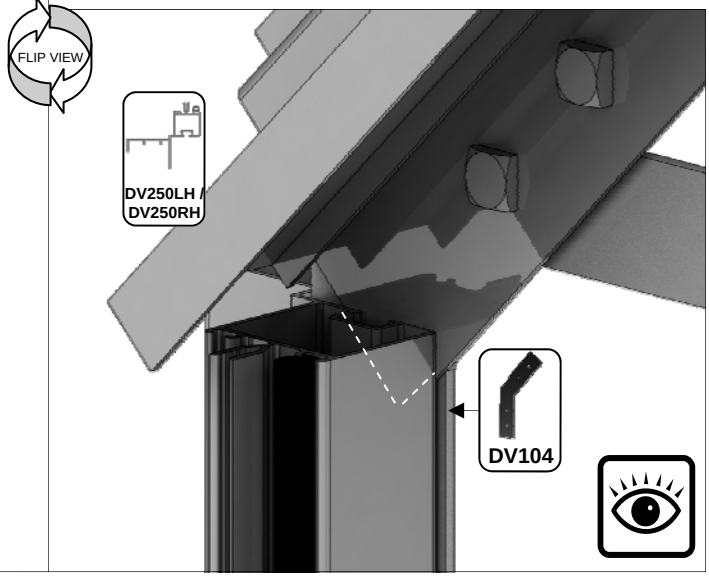
FLIP VIEW
DV250LH /
DV250RH
DV104

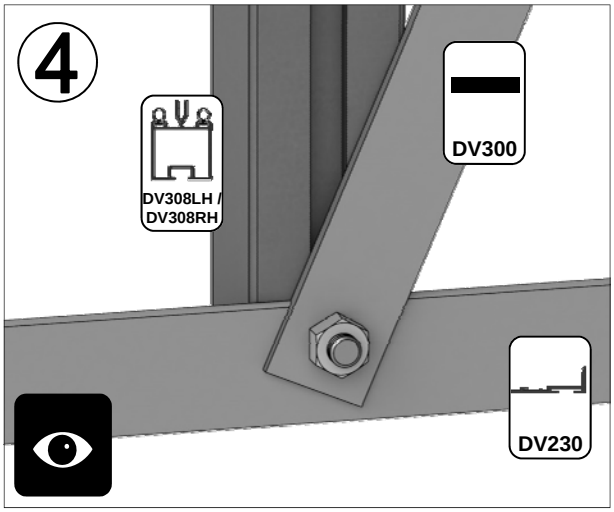
4
DV308LH /
DV308RH
DV300
DV230

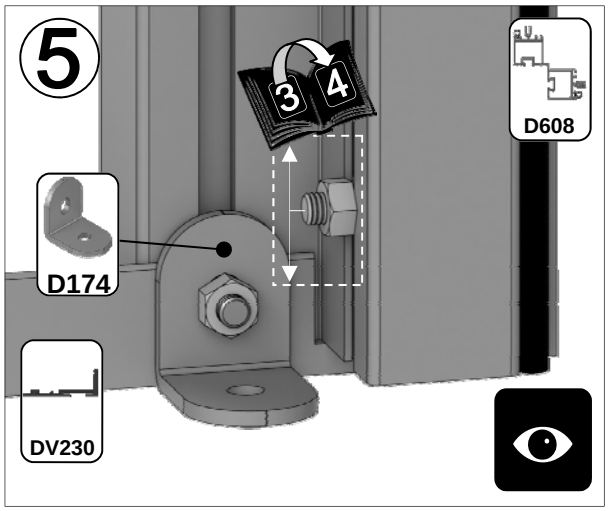
5
3
4
D608
D174
DV230

3

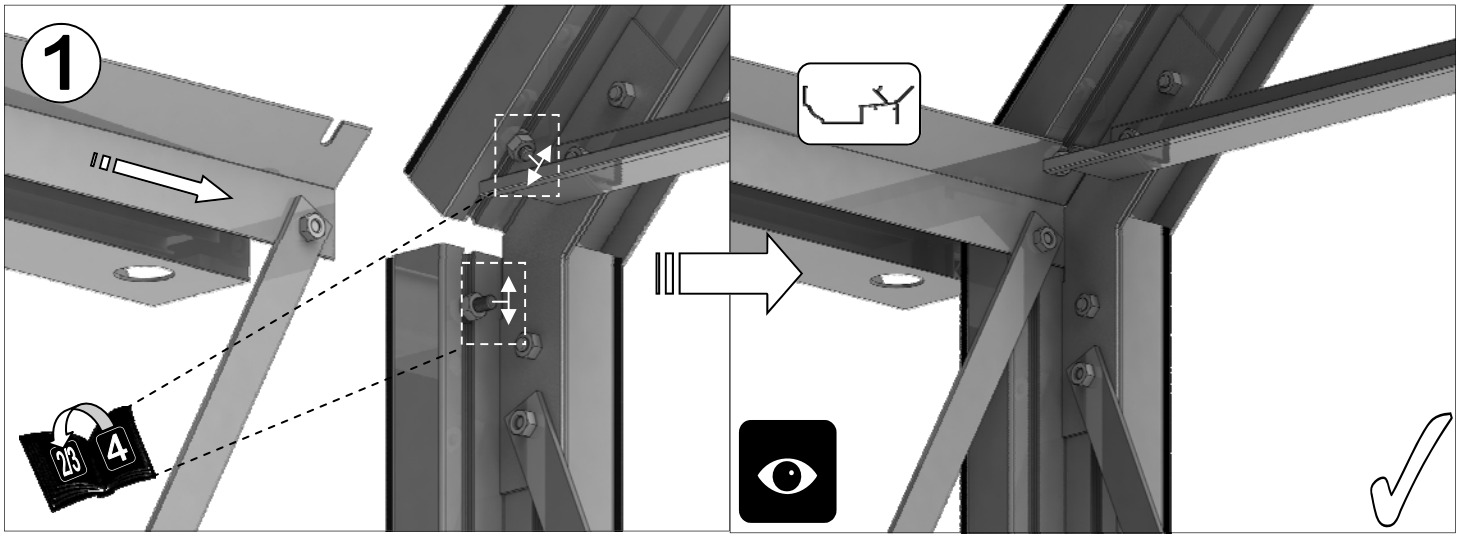
1
23
4

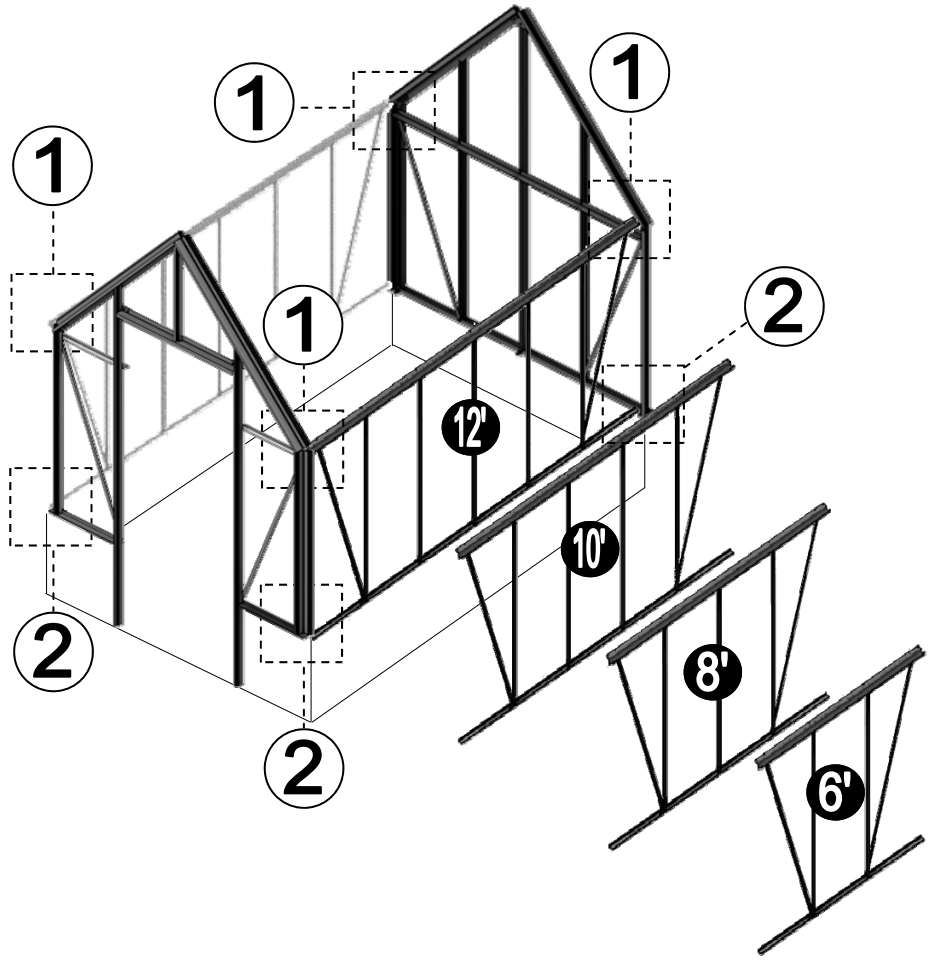
1
1
1
1
2
2
12'
10'
8'
6'

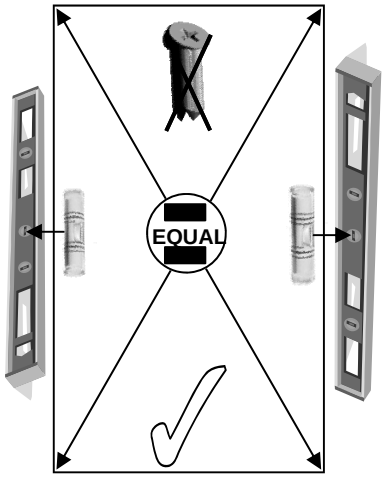
EQUAL

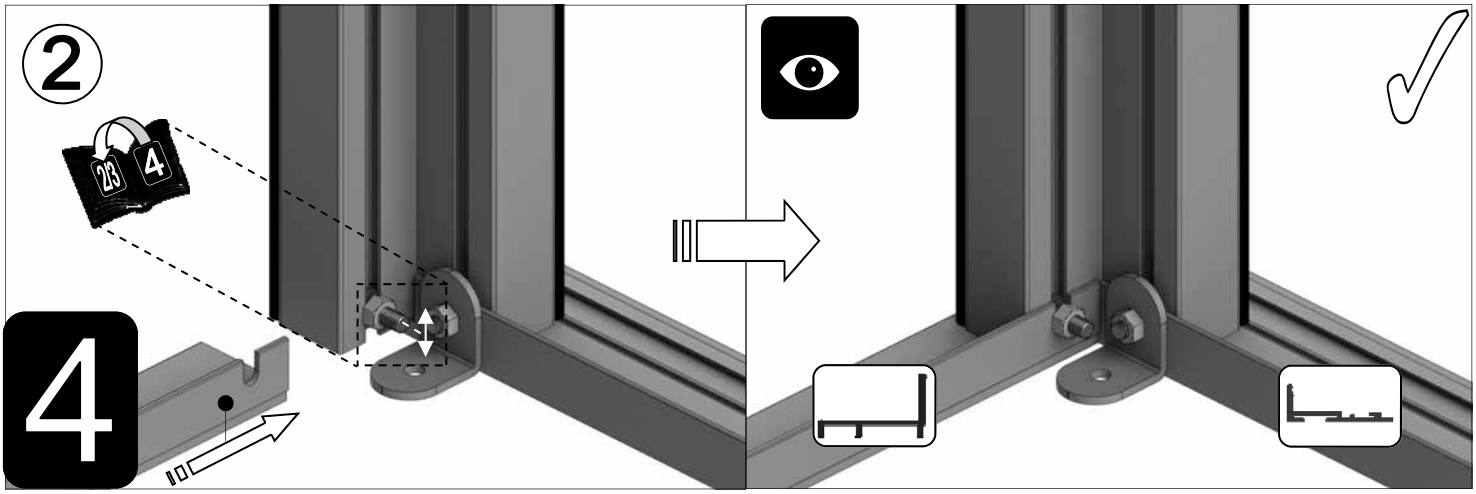
2
23
4
4

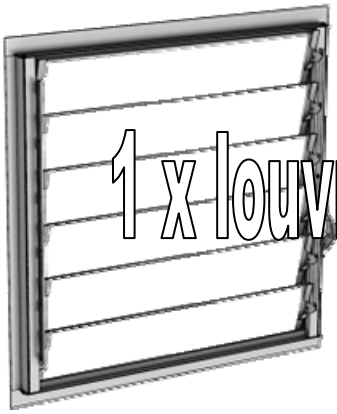

1 x louvre = {

Part No		mm	Quantity
D168L		552	1
D168R (handle)		552	1
D165		612	2
D166		552	2
FS6013		12	4

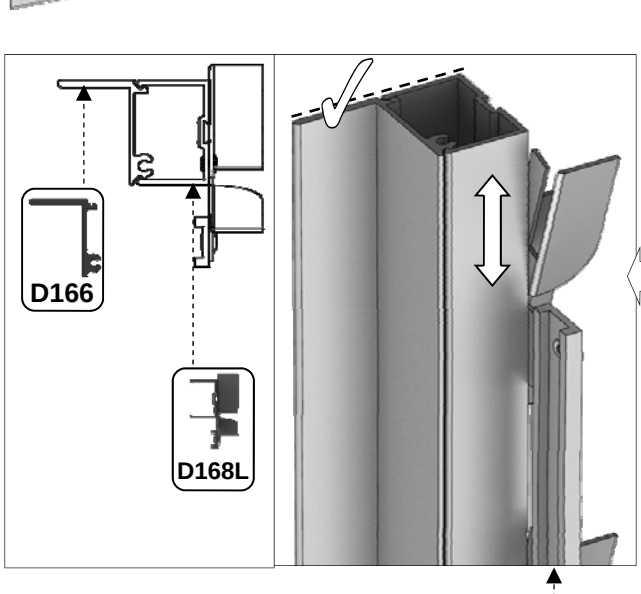

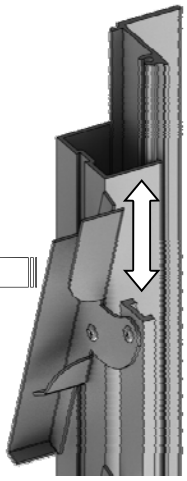

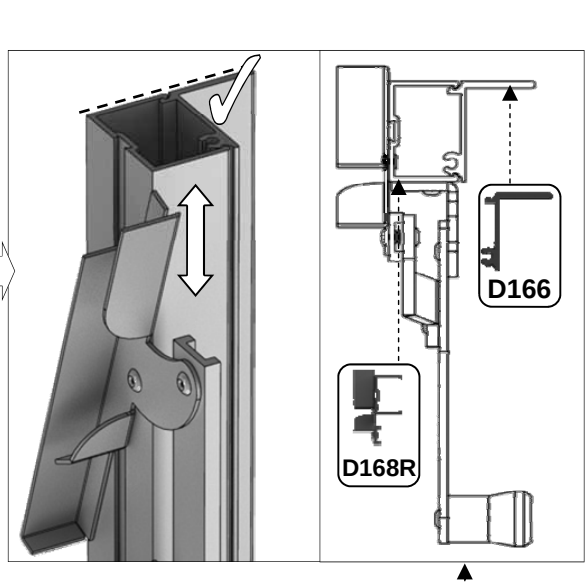

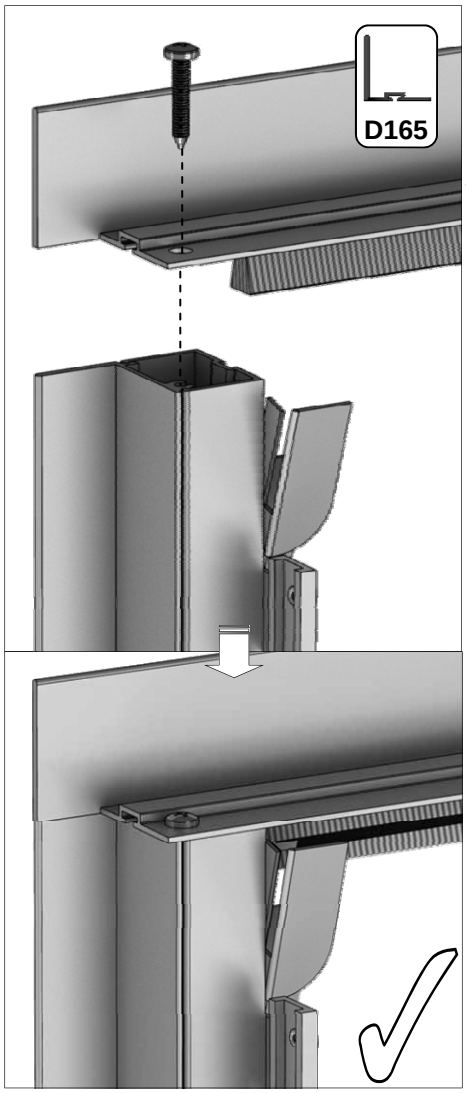

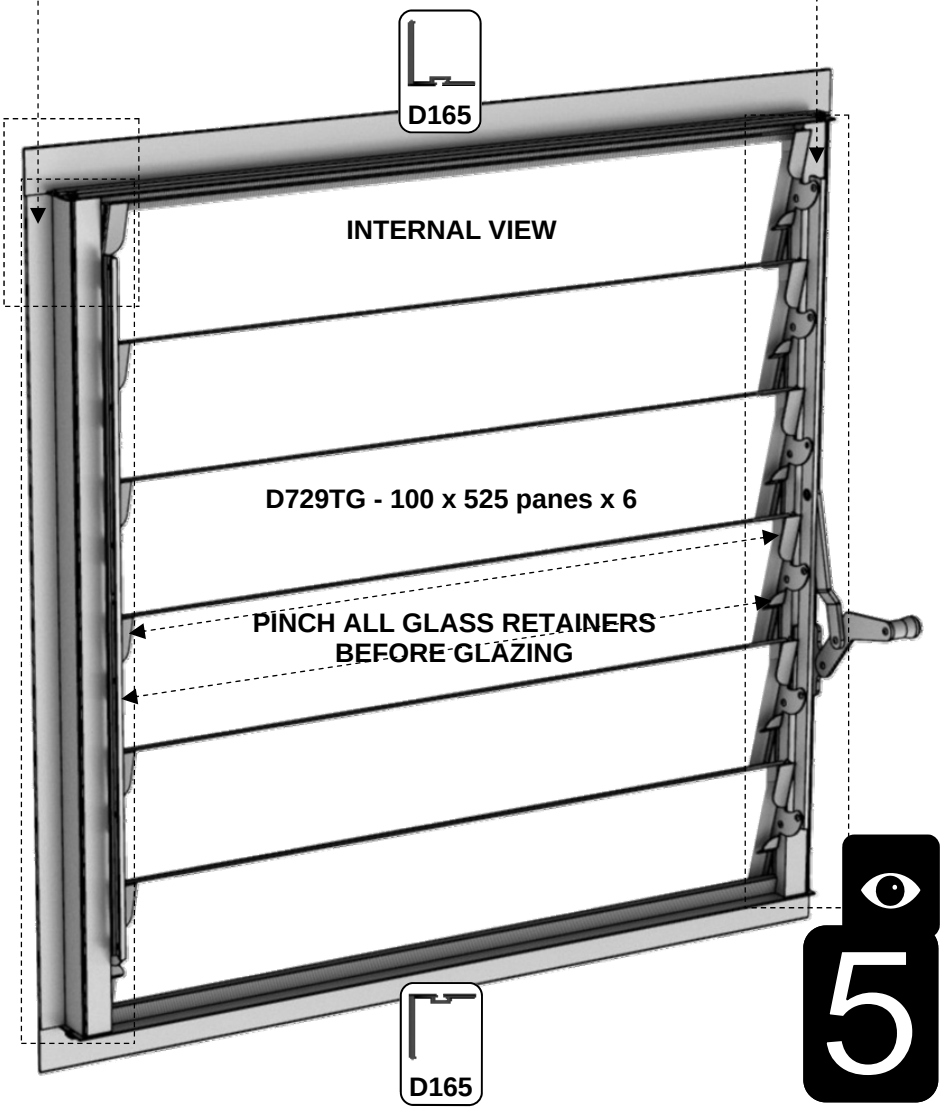

5

6’		
Part No	mm	Quantity
DV204	1897	1
DV253	1345	4
DV100	n/a	4
DV101	n/a	2
RUBBER	1000	11
SYBOLM6X11		8
SYBOLM6X22		16
SYNUTM6		32

8’		
Part No	mm	Quantity
DV201	2517	1
DV253	1345	6
DV100	n/a	6
DV101	n/a	3
RUBBER	1000	17
SYBOLM6X11		12
SYBOLM6X22		24
SYNUTM6		48

10’		
Part No	mm	Quantity
DV202	3137	1
DV253	1345	8
DV100	n/a	8
DV101	n/a	4
RUBBER	1000	22
SYBOLM6X11		16
SYBOLM6X22		32
SYNUTM6		64

12’		
Part No	mm	Quantity
DV203	3757	1
DV253	1345	10
DV100	n/a	10
DV101	n/a	5
RUBBER	1000	27
SYBOLM6X11		20
SYBOLM6X22		40
SYNUTM6		80

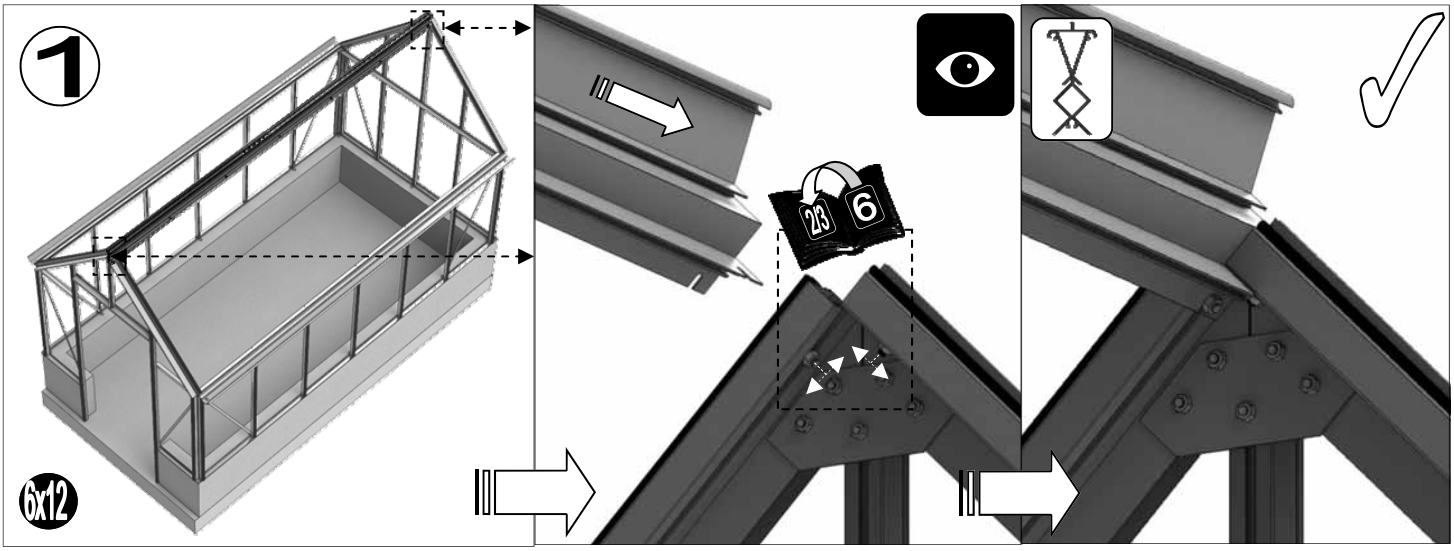

2

- End finials need to be pinched onto the ridge using ‘DV282’ grub screws.
- Depending on your ridge length a half cresting may need to be cut. Some spacer bar may also be required ‘DV281’ cut into two equal sections.

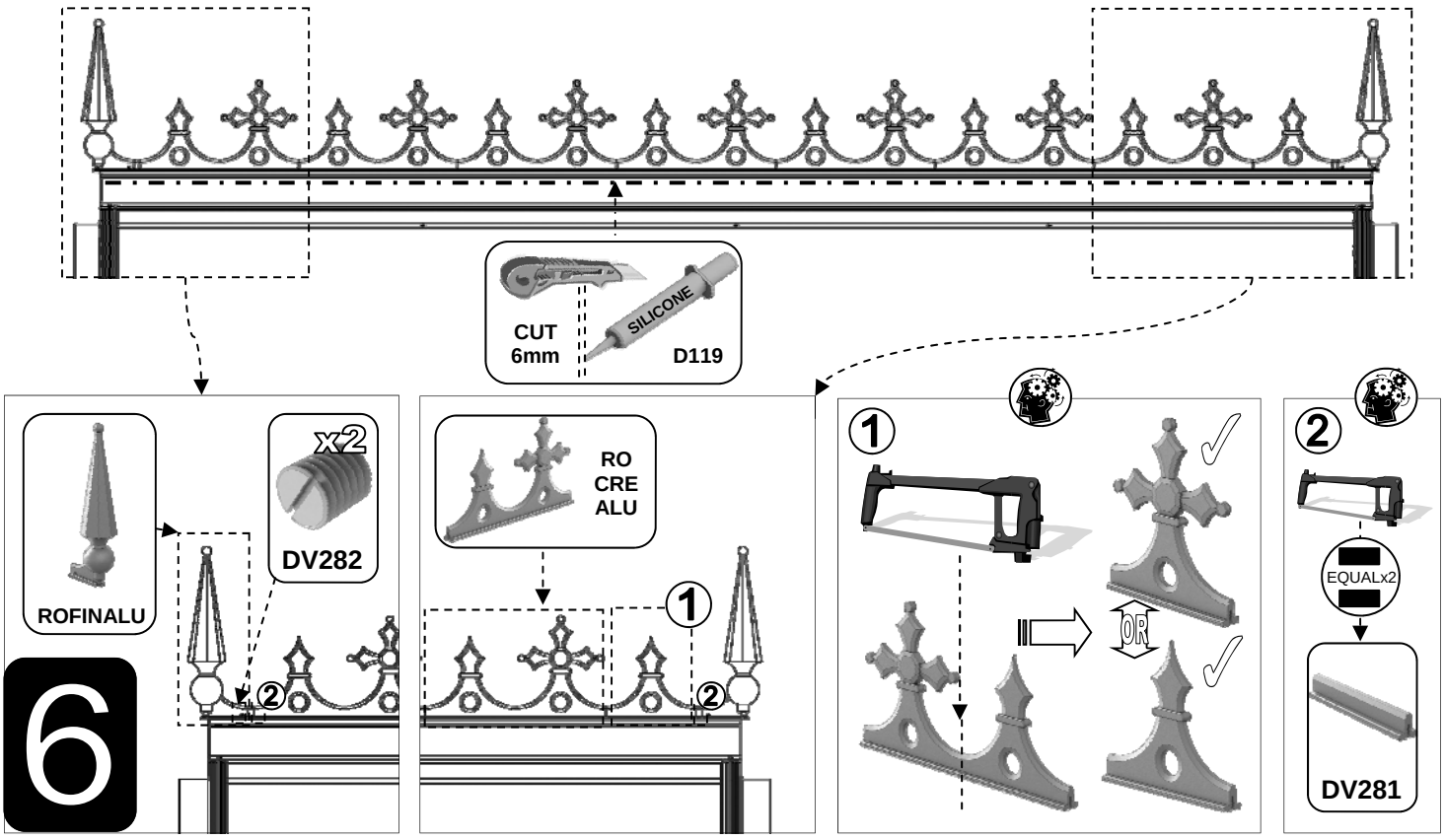

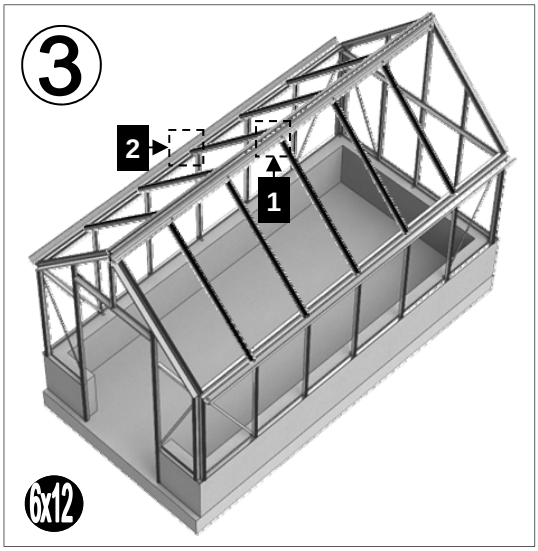
3
2
1
6x12

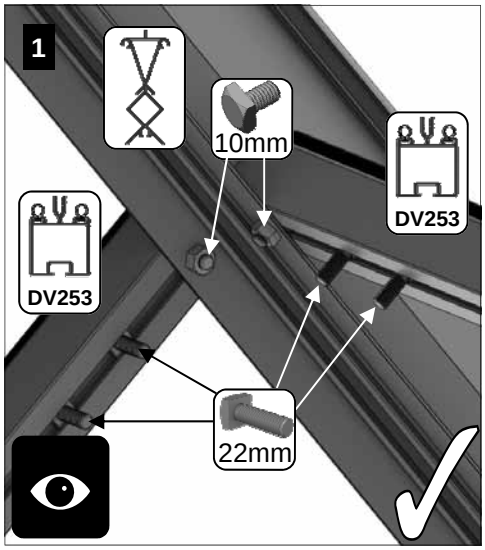
1
10mm
DV253
DV253
22mm

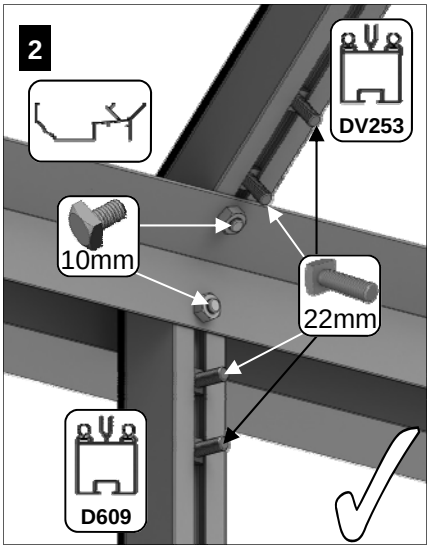
2
DV253
10mm
22mm
D609

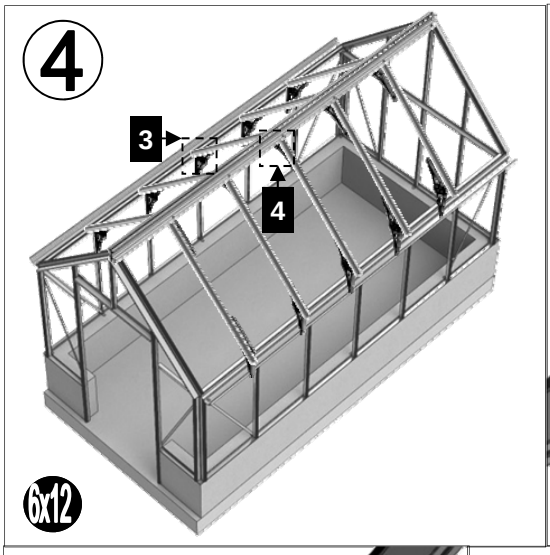
4
3
4
6x12

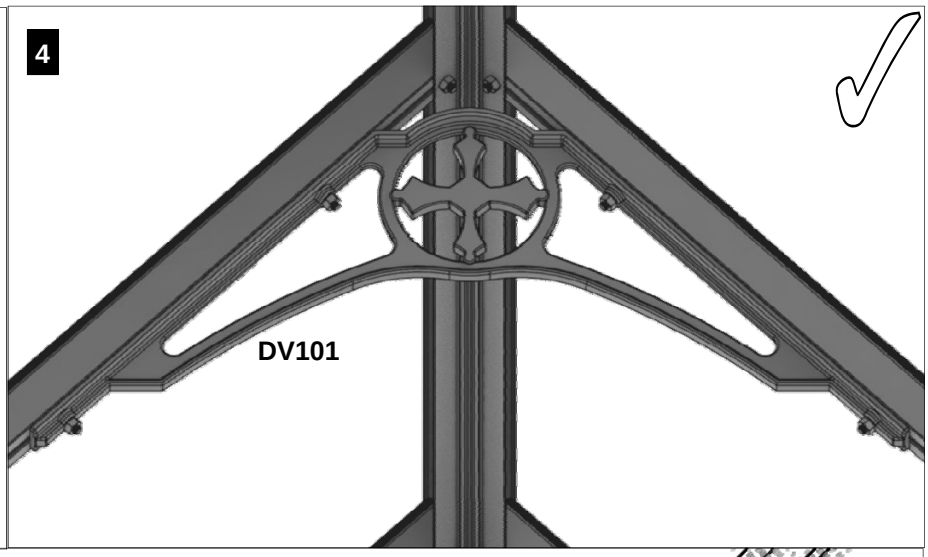
4
DV101

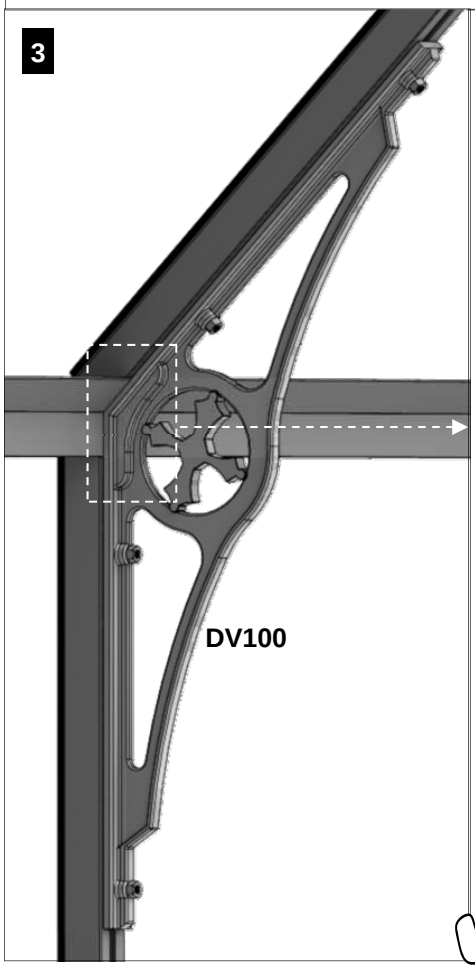
3
DV100

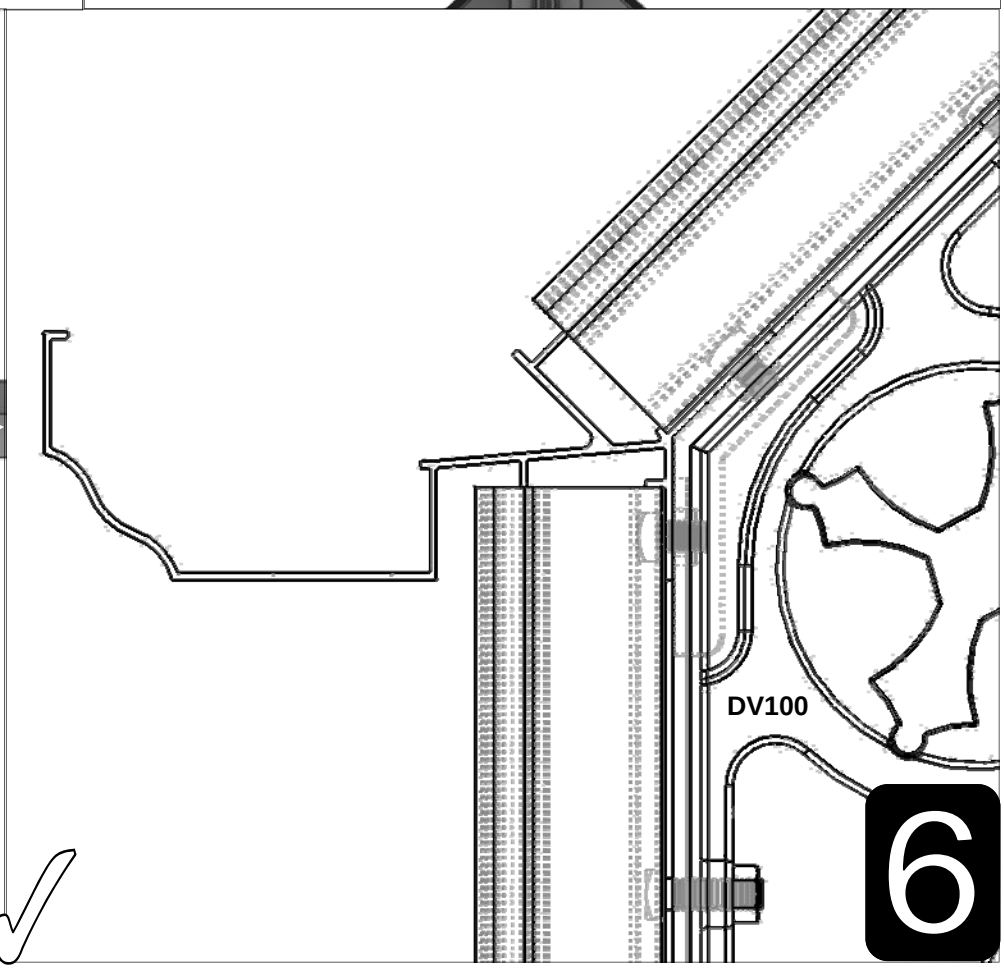
DV100
6

D1208
1 of -
610 x 610
pane

Part No		mm	Quantity
D866		639	1
D863L		613	1
D863R		613	1
D862	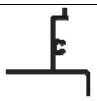	593	1

Part No		mm	Quantity
D220 PLUS SCREW		N/A	2
D205		N/A	2
SY-BOLM6X11		10	4
SYNUTM6		M6	4
8 X 12 S/T FS6017		10	2
8 x 19 S/T FS6018		19	2

1

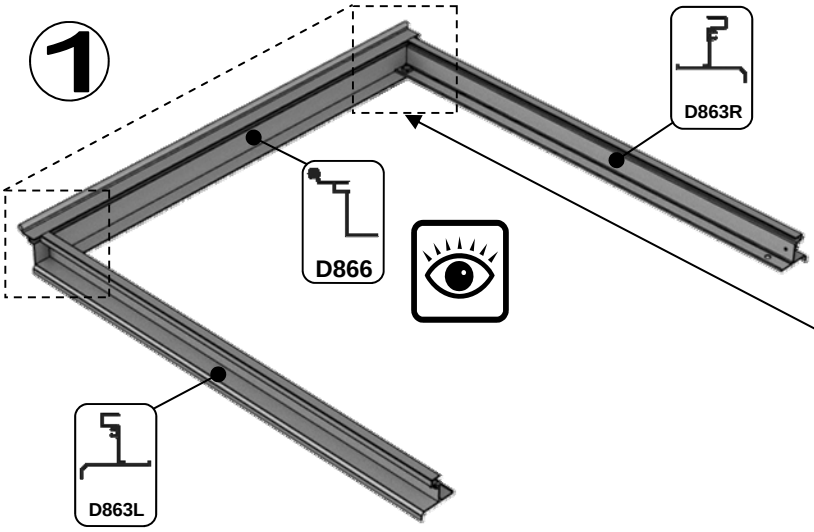

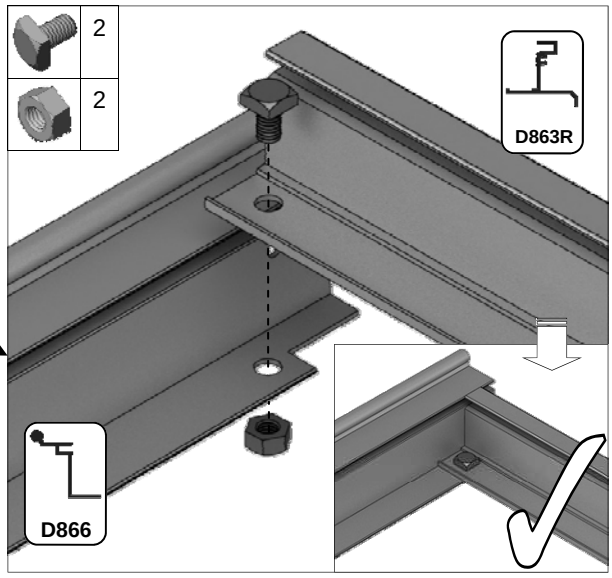

2

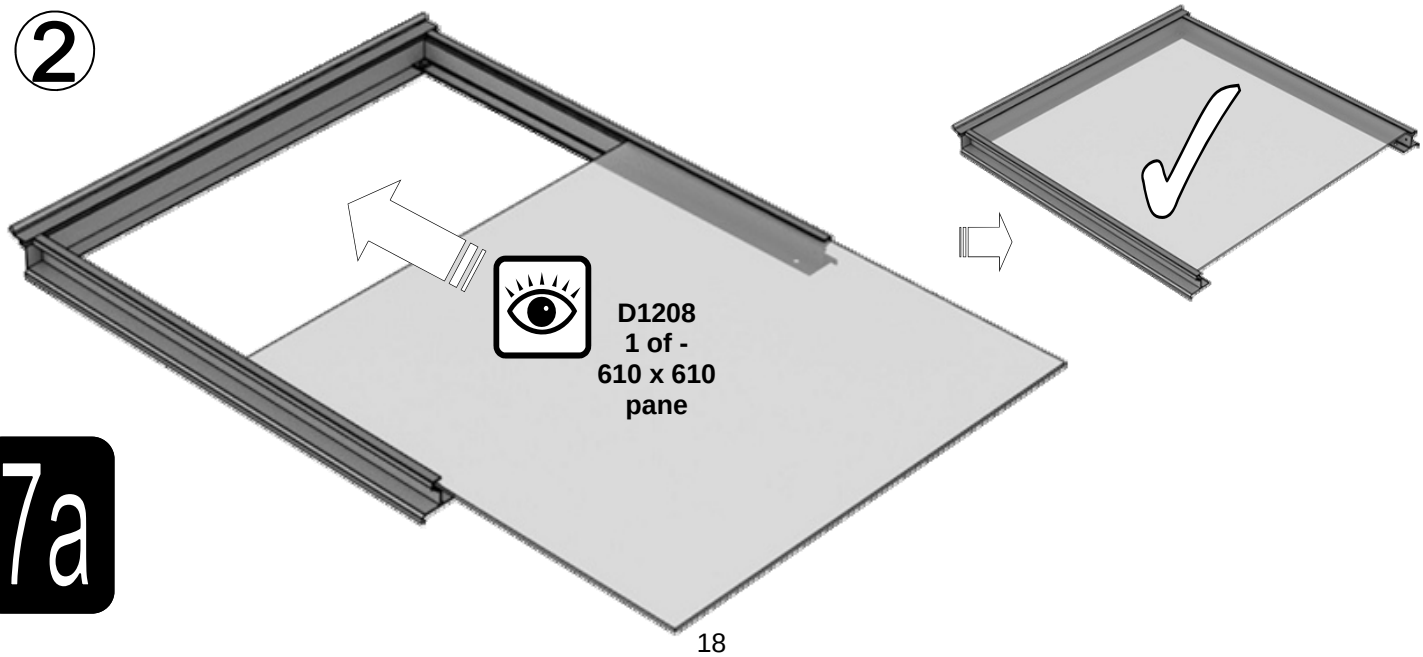

7a

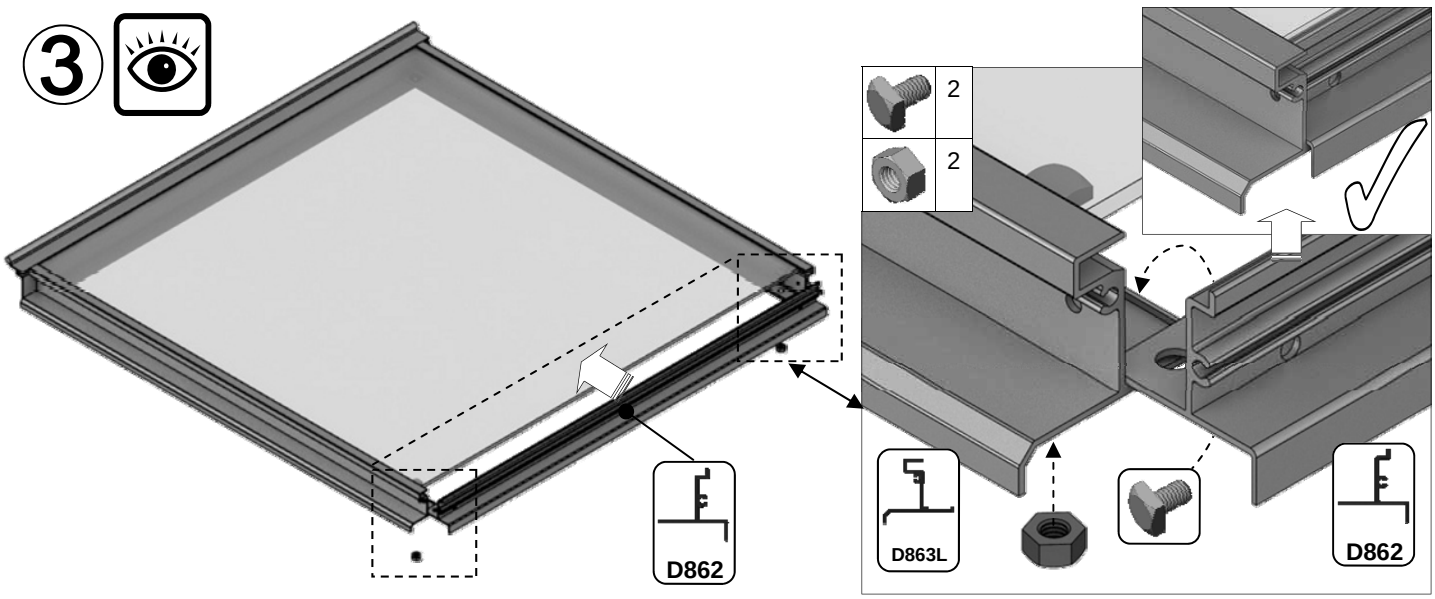
3
2
2
D862
D863L
D862

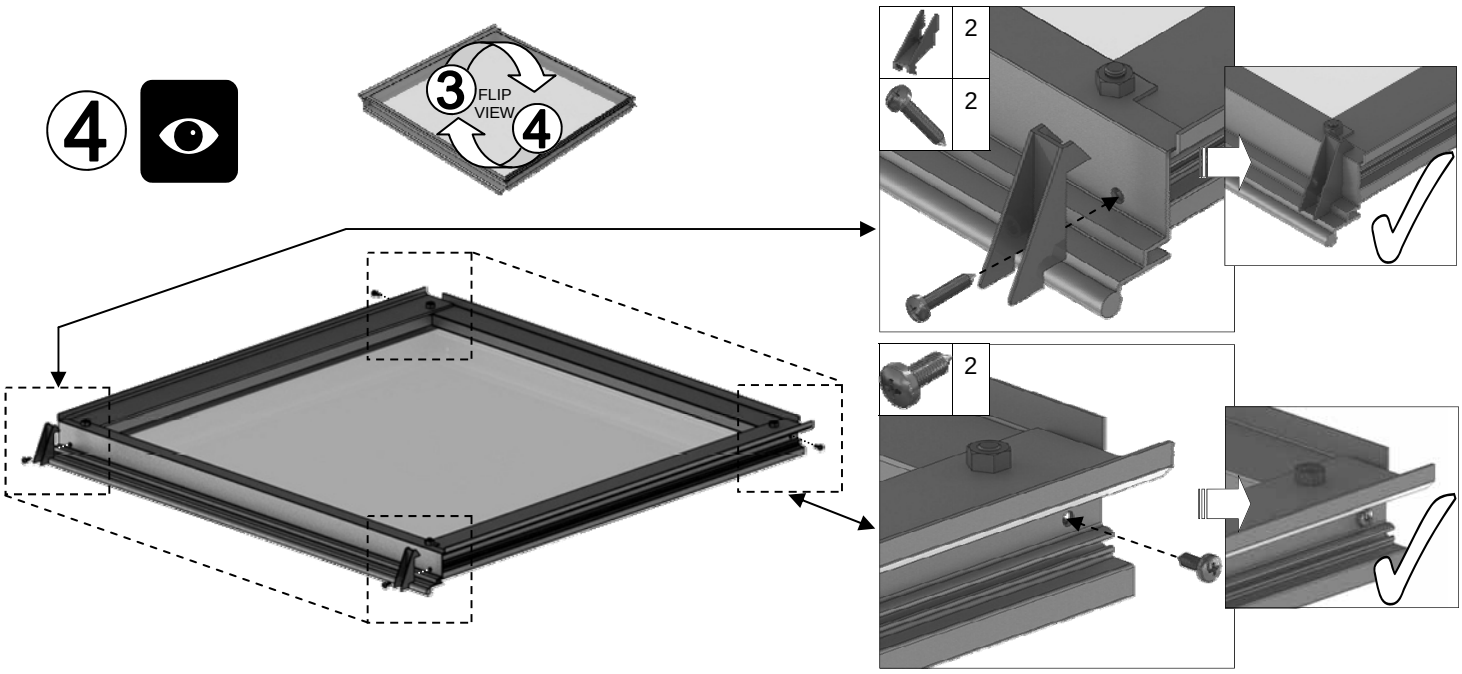
4
3
FLIP
VIEW
4
2
2
2

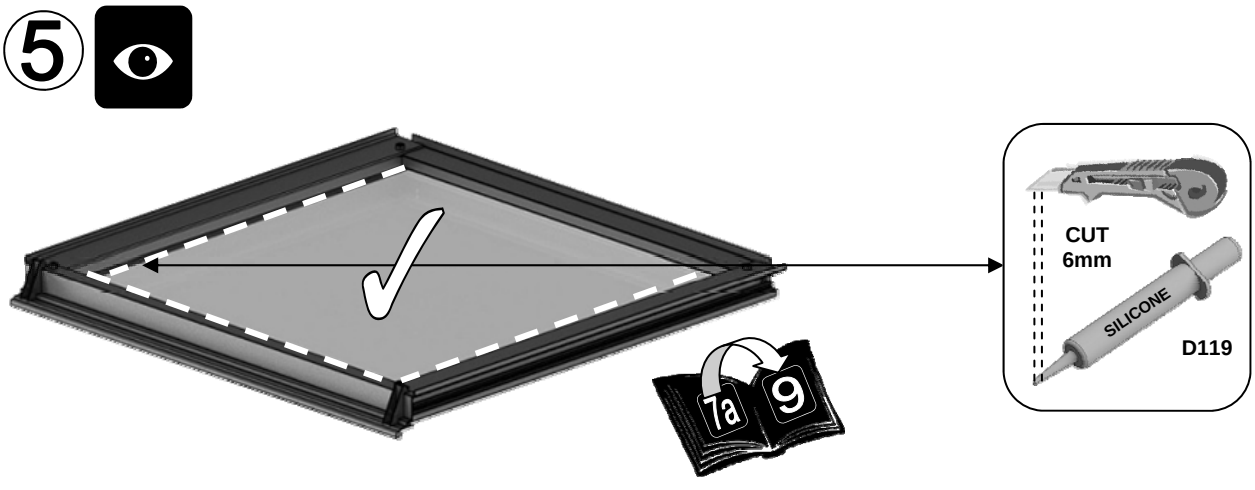
5
CUT
6mm
SILICONE
D119
7a
9

7a

1 vent slam bar = {

Part No		mm	Quantity
SY-BOLM6X11		10	2
SY-BOLM6X15		15	2
SYBOLM6X11CROP		10	2
SYNUTM6		N/A	4

Part No		mm	Quantity
D079 PLUS FLUFF		590	1
D114		N/A	2

⑥

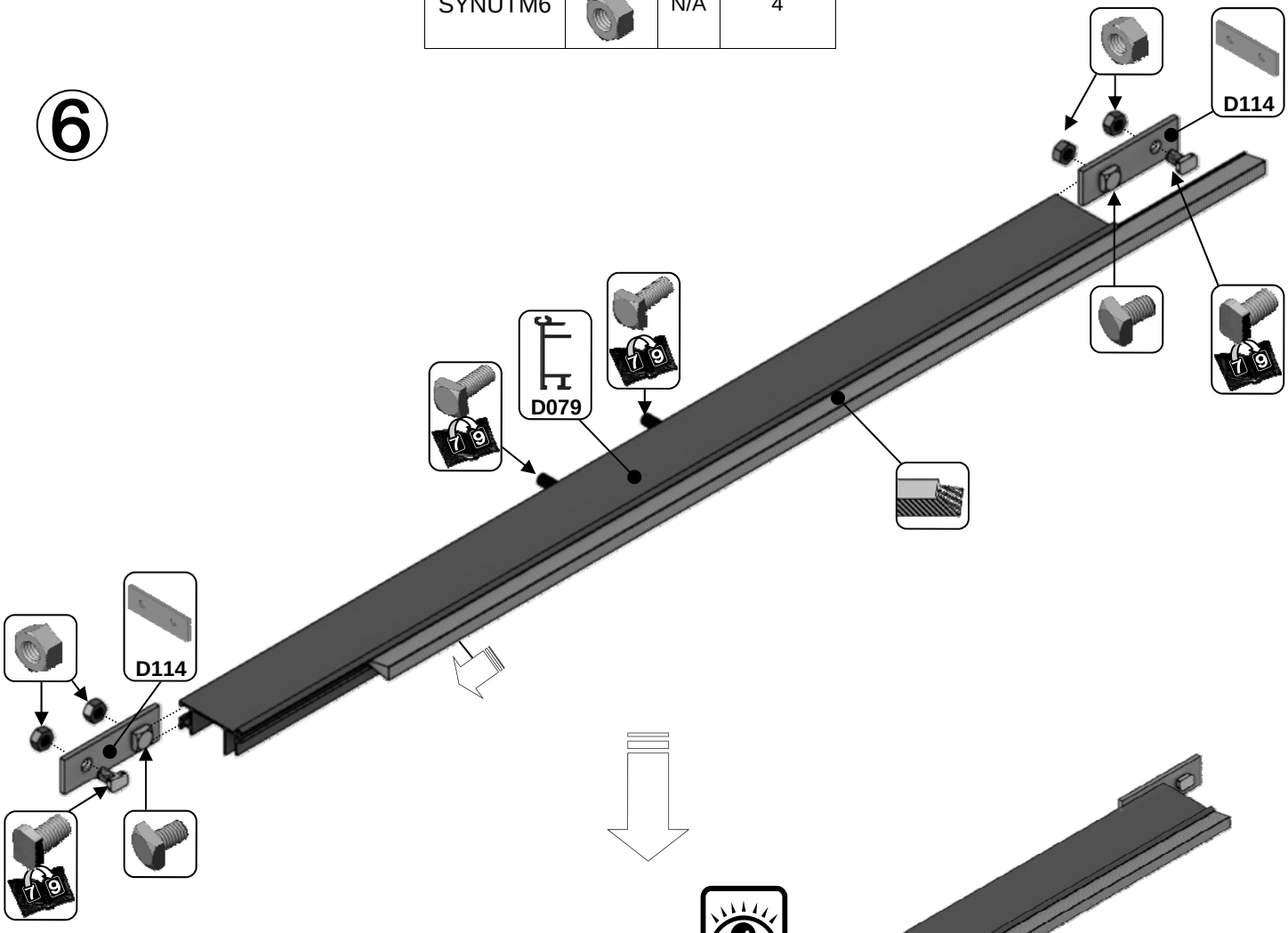

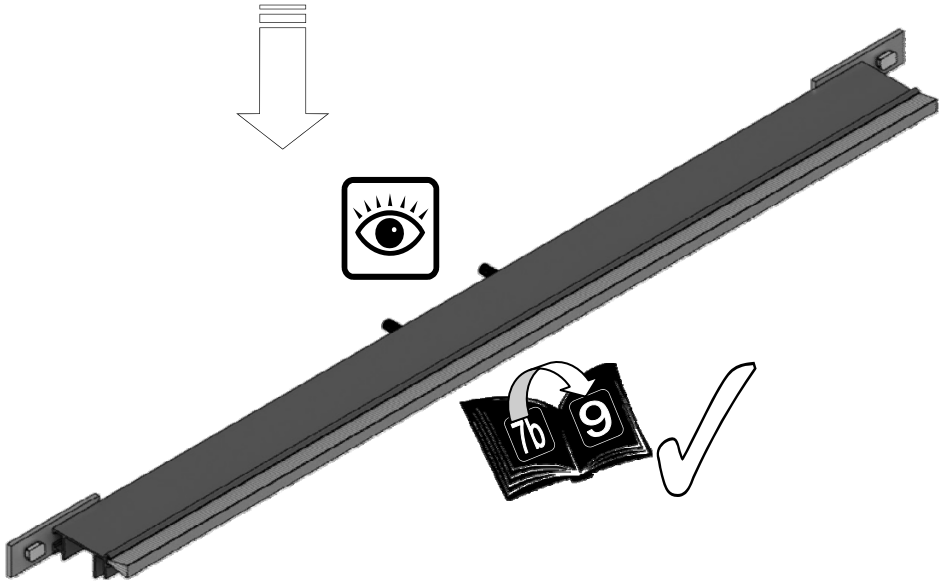

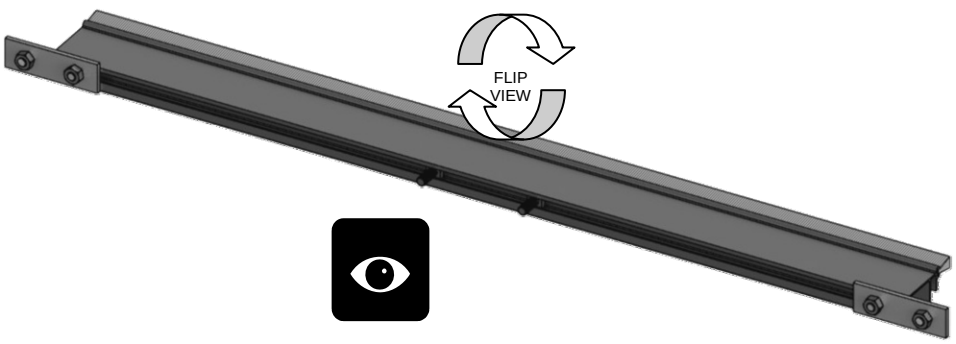

7b

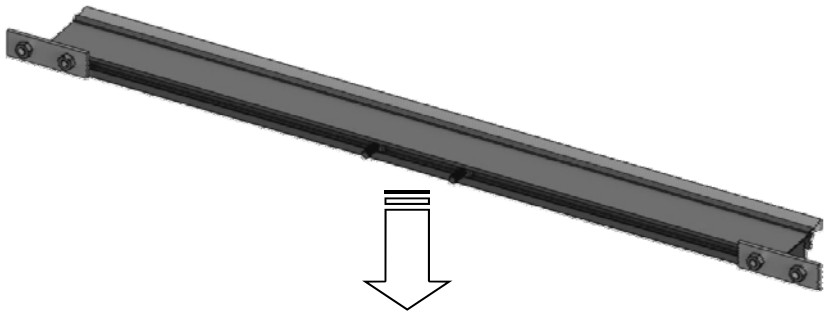

7b

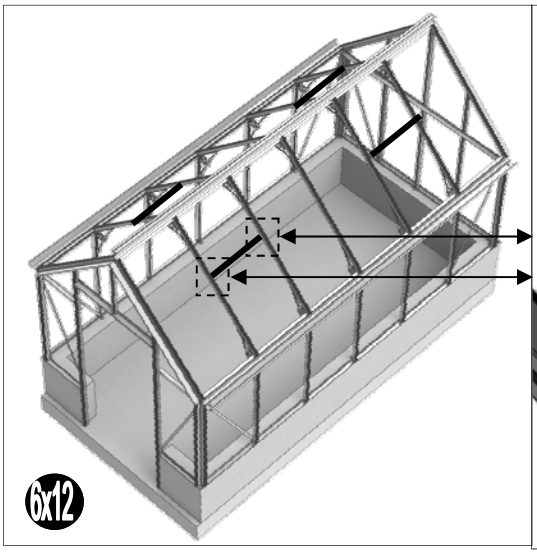

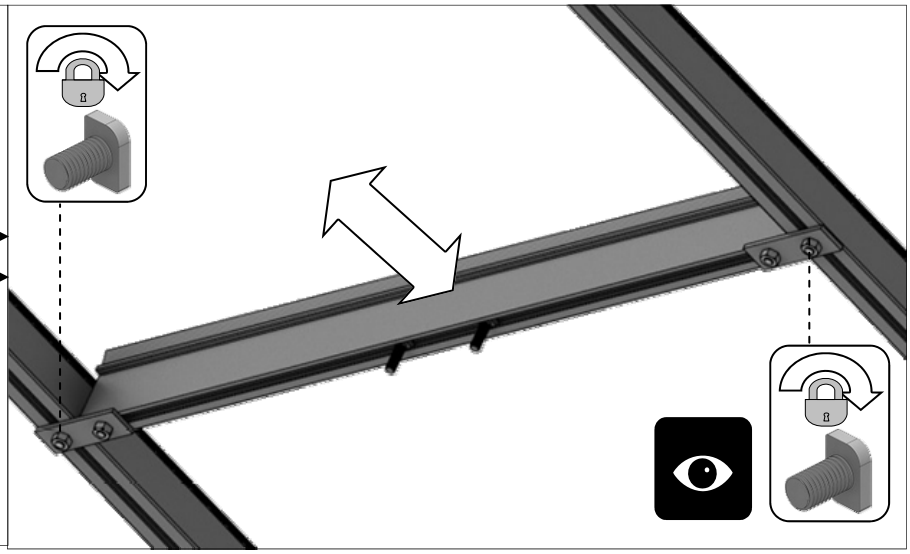

GLAZING (plans pto):

Glass and aluminium can potentially cause injury. Please ensure you wear protective goggles, gloves, headgear and suitable footwear when assembling and glazing the building.

Please remember that glass is fragile and should be handled with extreme care. Always clear up and dispose of any breakages immediately.

Layout the plastic bar cappings e.g. D618 and covers e.g. D619 around the building like a sundial checking that all is present and correct, see right and pto. You can also place the roof cappings in the gutters so they are closer to hand.

Use the capping e.g. 618 and the self tapping screws to then hold the glass in place. The covers then enclose the screw heads giving a neat finish e.g. D619.

IMPORTANT: On the roof sections please make sure that you place a screw around 25mm / 1" from the bottom of each capping strip (create a hole in the plastic if required) and that the screws are nice and tight to avoid any glass slippage.

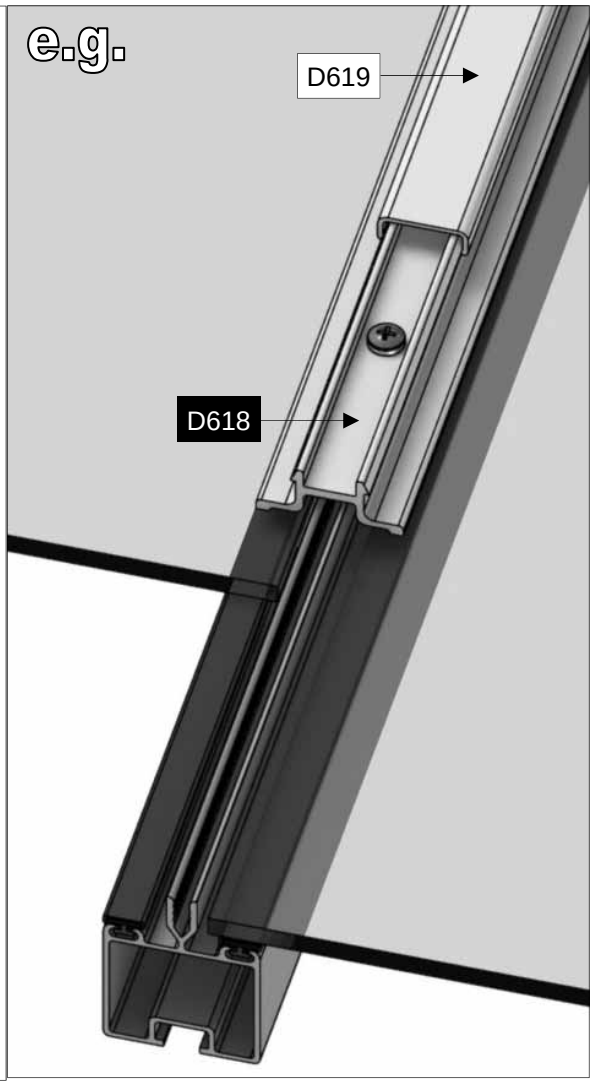

8

PART No	Section	Size (mm)
D618		1144
D662		600
DV409		2091
DV479		1384
DV608L/R		1657
DV633L/R		2173
DV653		1378
D610		1160
D620		1144
DV650		1345
D614		1162
D619		1144
D666		602
DV436		2091
DV480		1384
DV609L/R		1657
DV634L/R		2173
DV656		1378

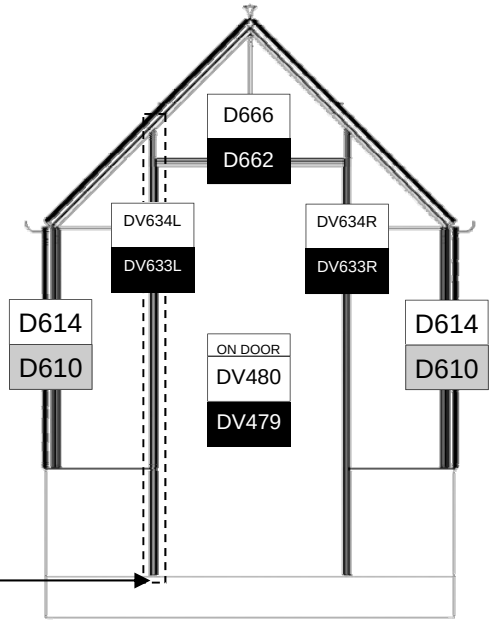

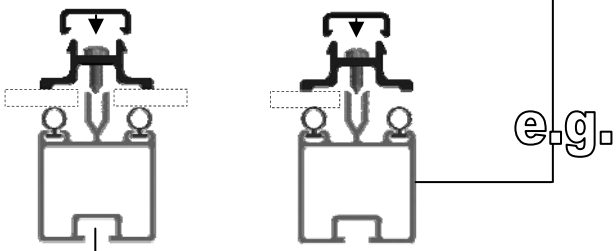

e.g.

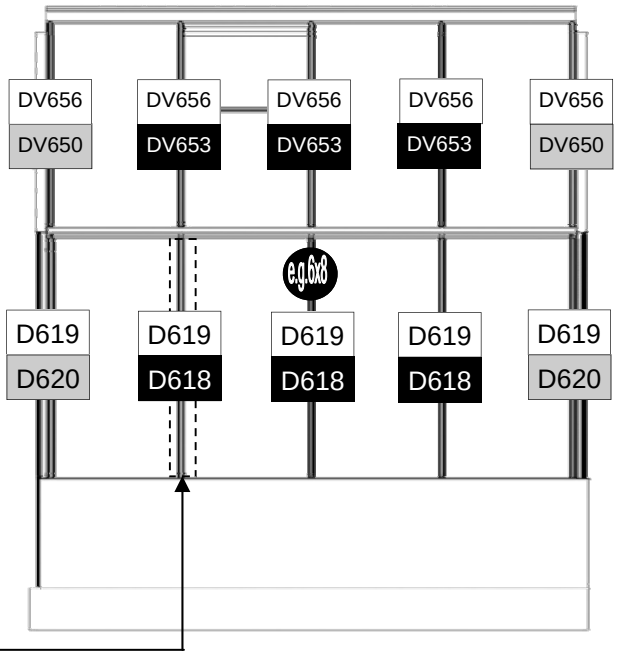

e.g.

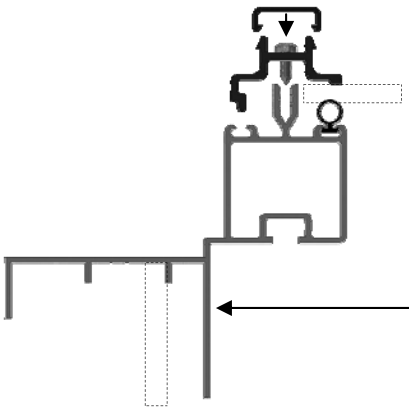

e.g.

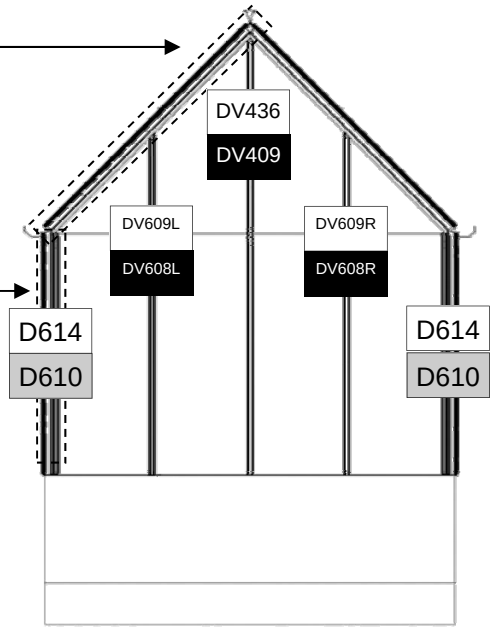

e.g.

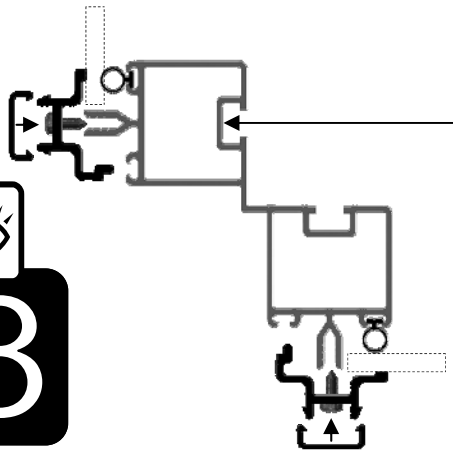

VICTORIAN DWARF 6 TOUGHENED GLASS

e.g. 6x8

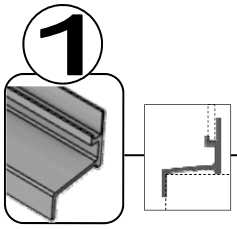

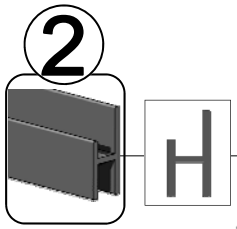

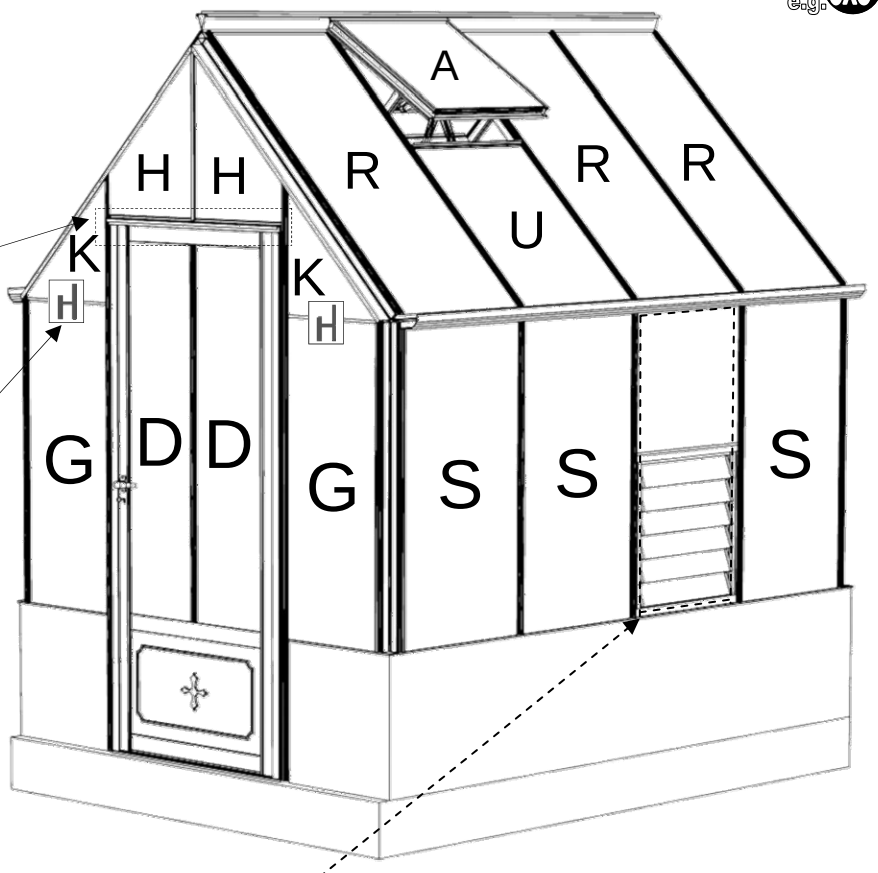

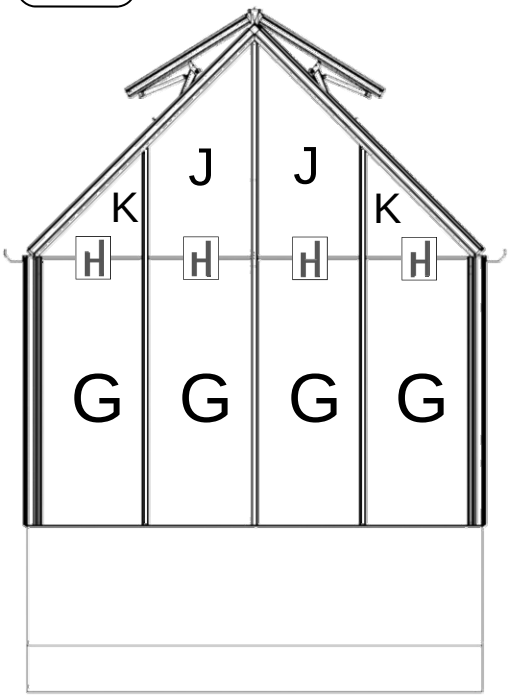

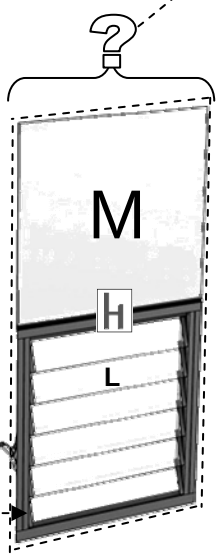

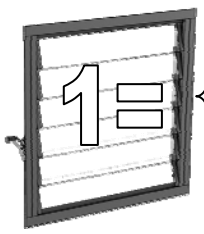

D624	M	610 X 550	1
D729	L	525 X 100	6
D101 / ROSEPS	H	610 long	1

PART No		Size (mm)	6’	8’	10’	12’
D1216	S	610 X 1162	5	7	8	10
DV706	R	610 X 1384	4	6	6	8
DV720	U	610 X 790	2	2	4	4
D1208	A	610 X 610	2	2	4	4
D769	G	457 X 1162	6			
DV700	D	357 X 1384	2			
DV710	K	ANGLE	4			
DV711	J	ANGLE	2			
DV712	H	ANGLE	2			
D223/B		Cut to 904mm	1			
D101 / ROSEPS	H	610 long (inc cuts to 457&305mm)	6 + (LOUVRE X 1)			

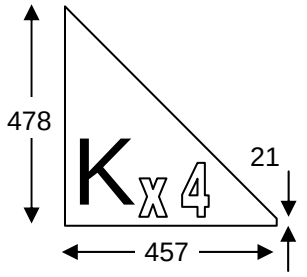

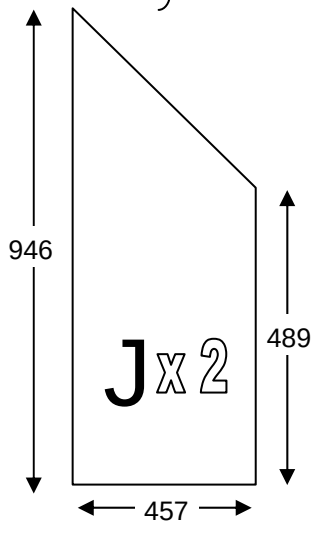

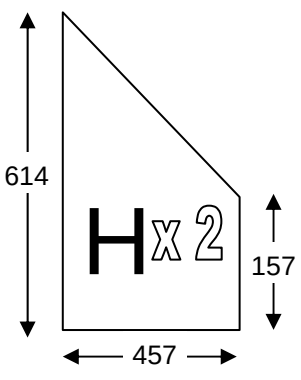

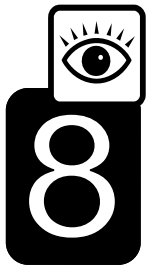

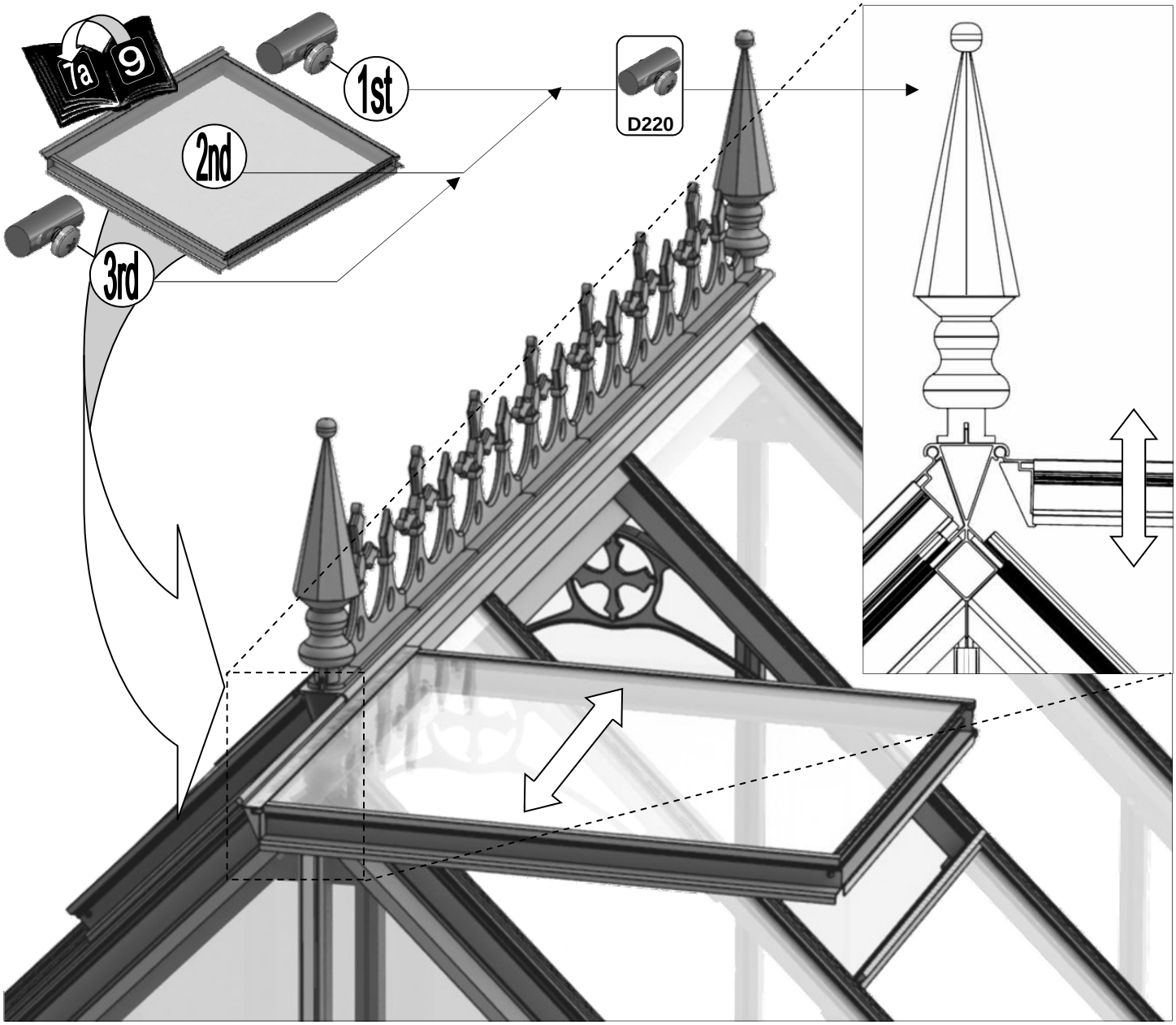
7a
9
1st
2nd
3rd
D220

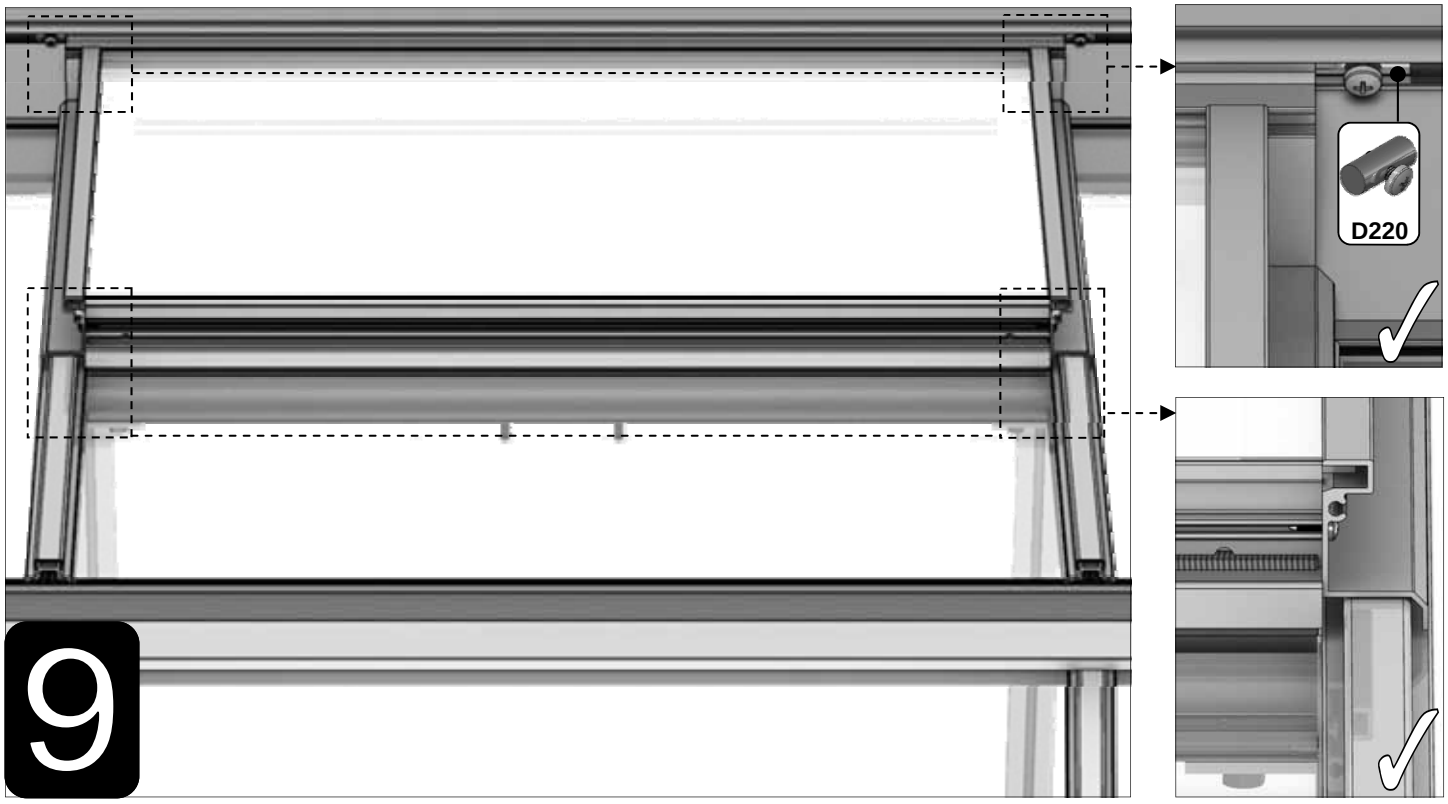
D220
9

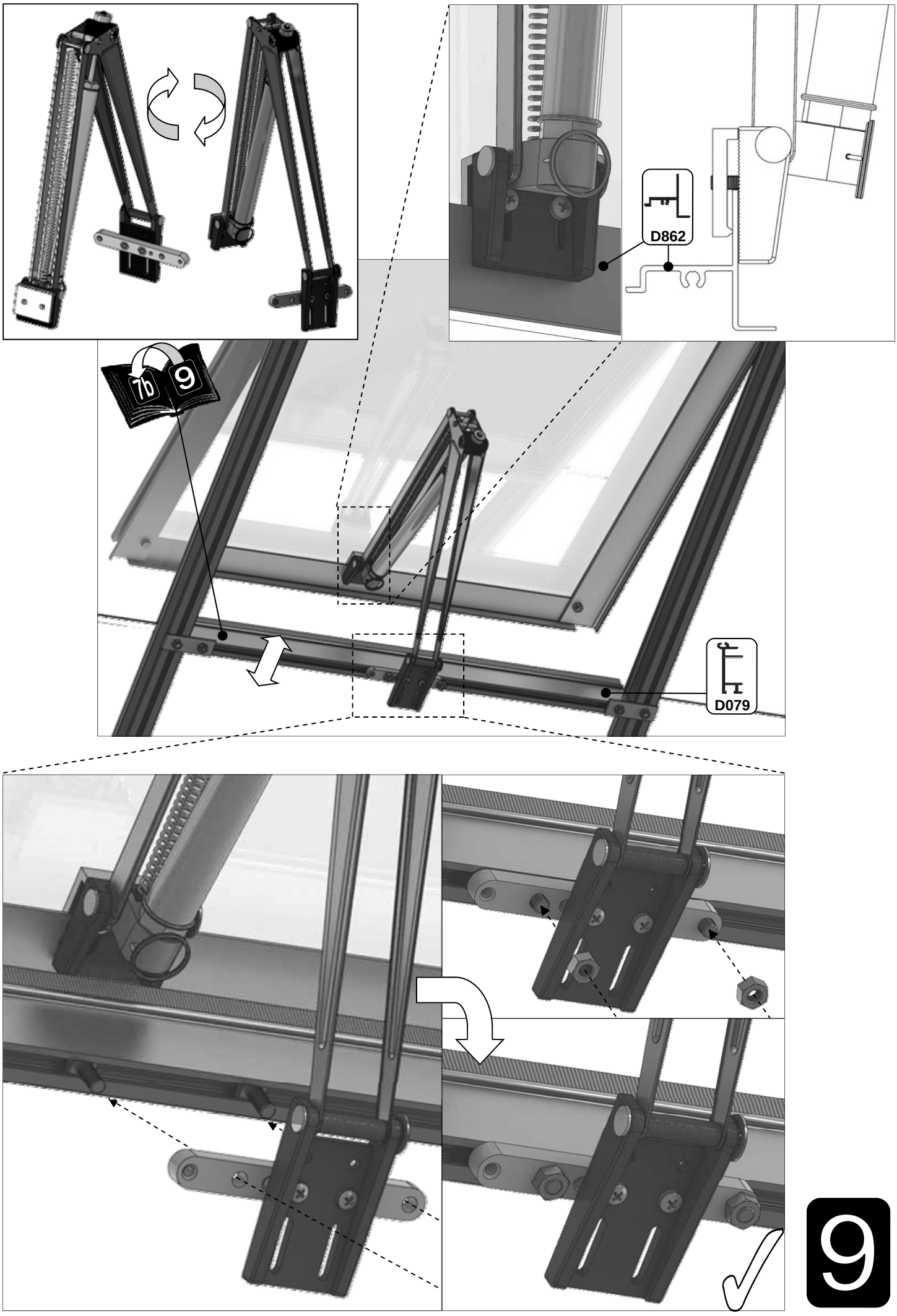

9

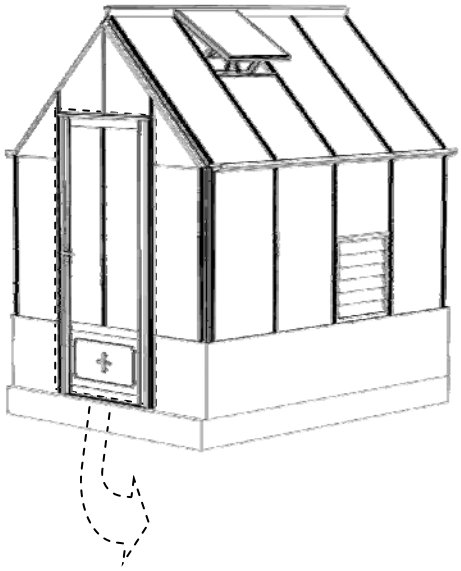

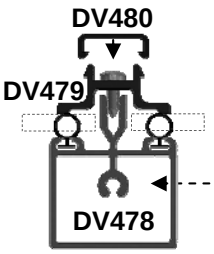
DV480
DV479
DV478

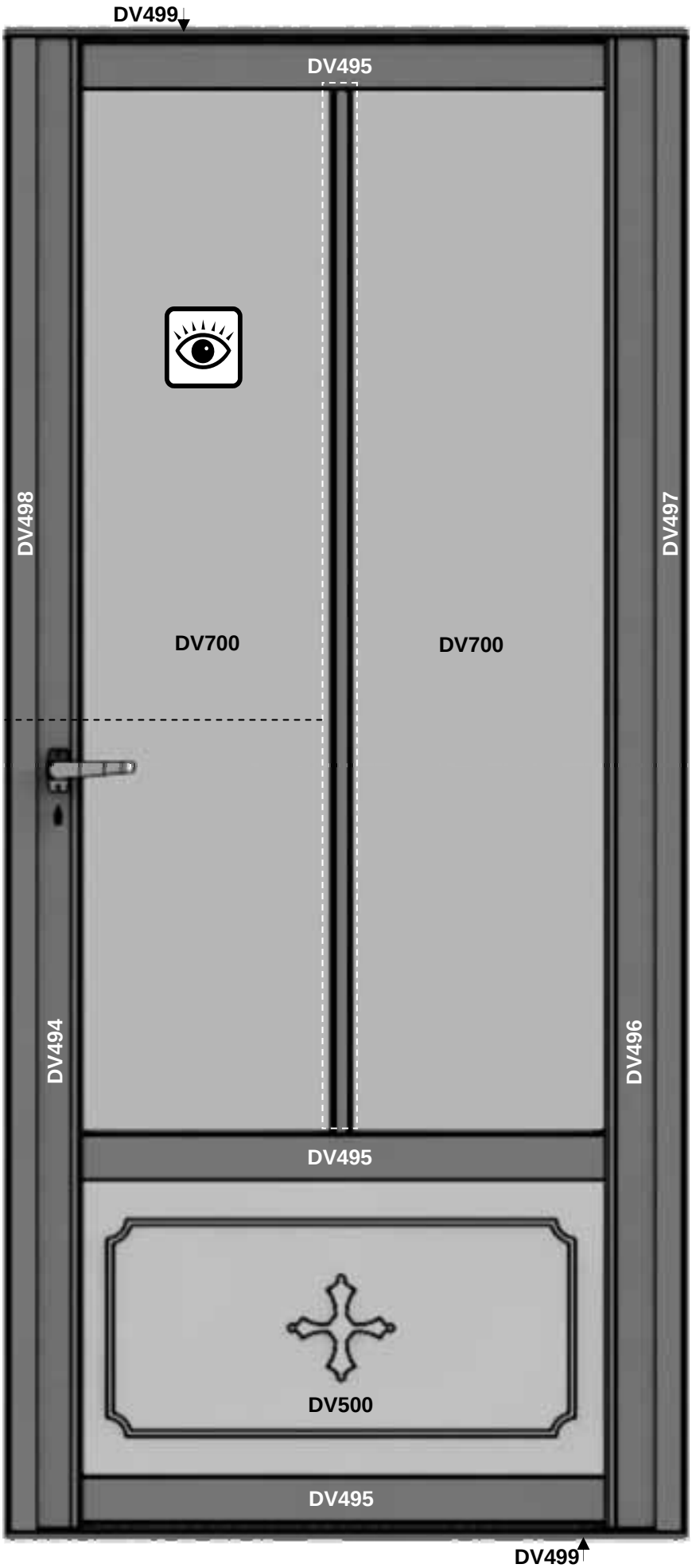
DV499
DV495
DV498
DV497
DV700
DV700
DV494
DV496
DV495
DV500
DV495
DV499

10

Part No		Quantity
D522		10
SYBOLM6 X11CROP		20
SYNUTM6		20

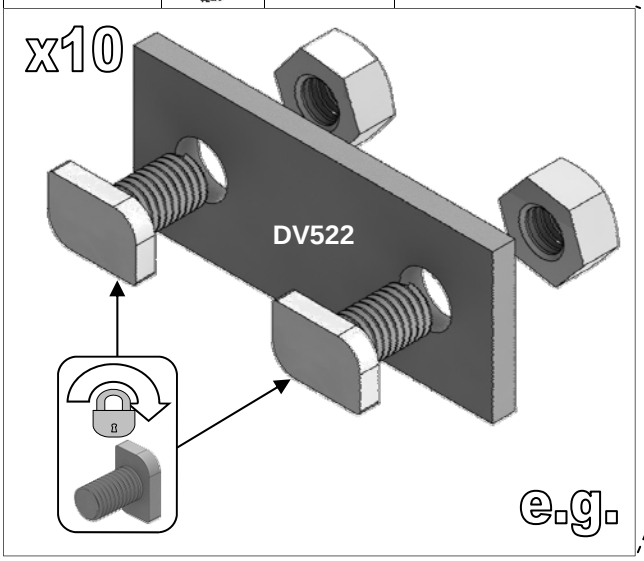

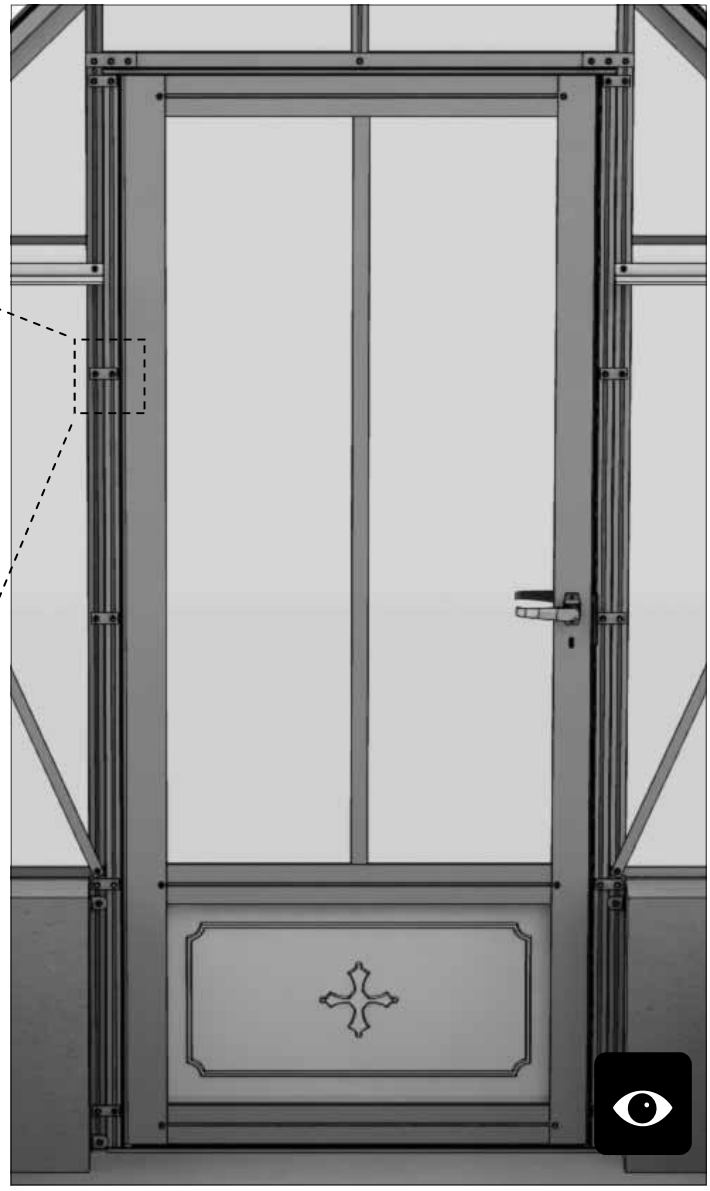

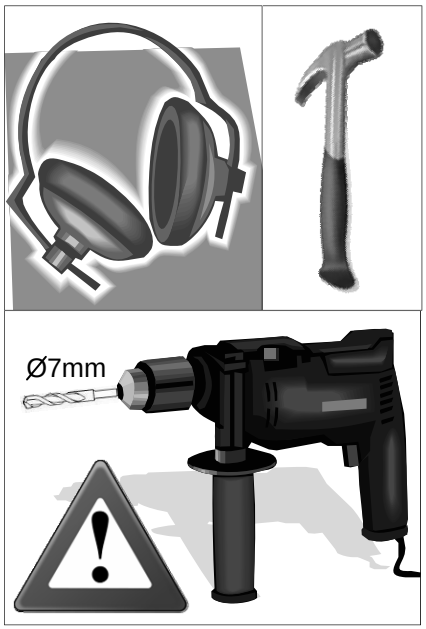

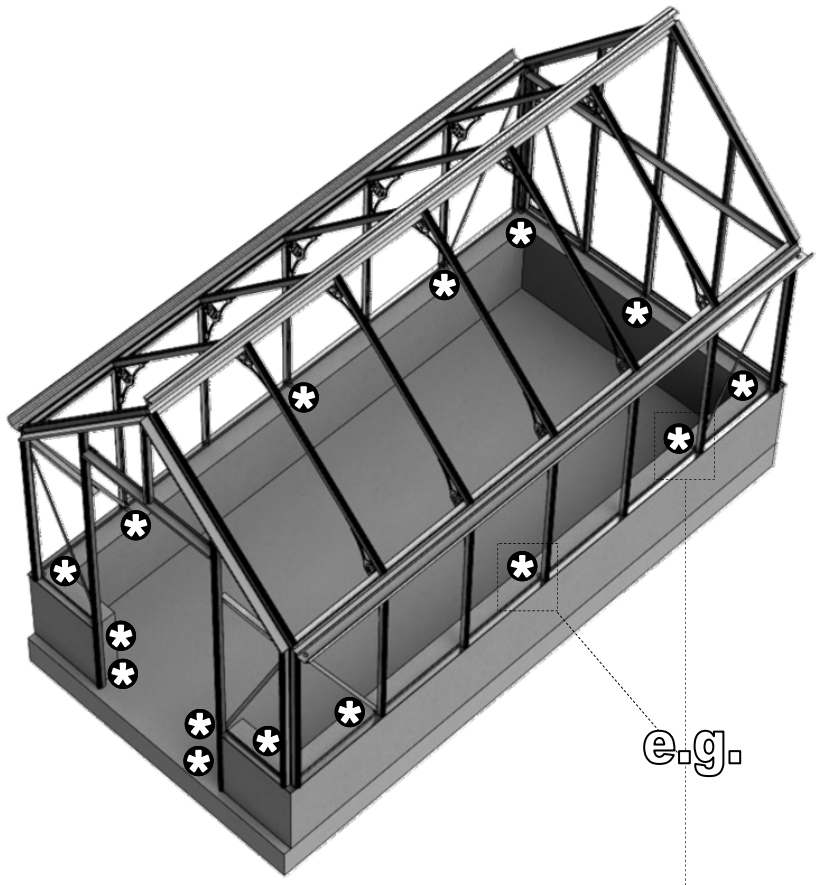

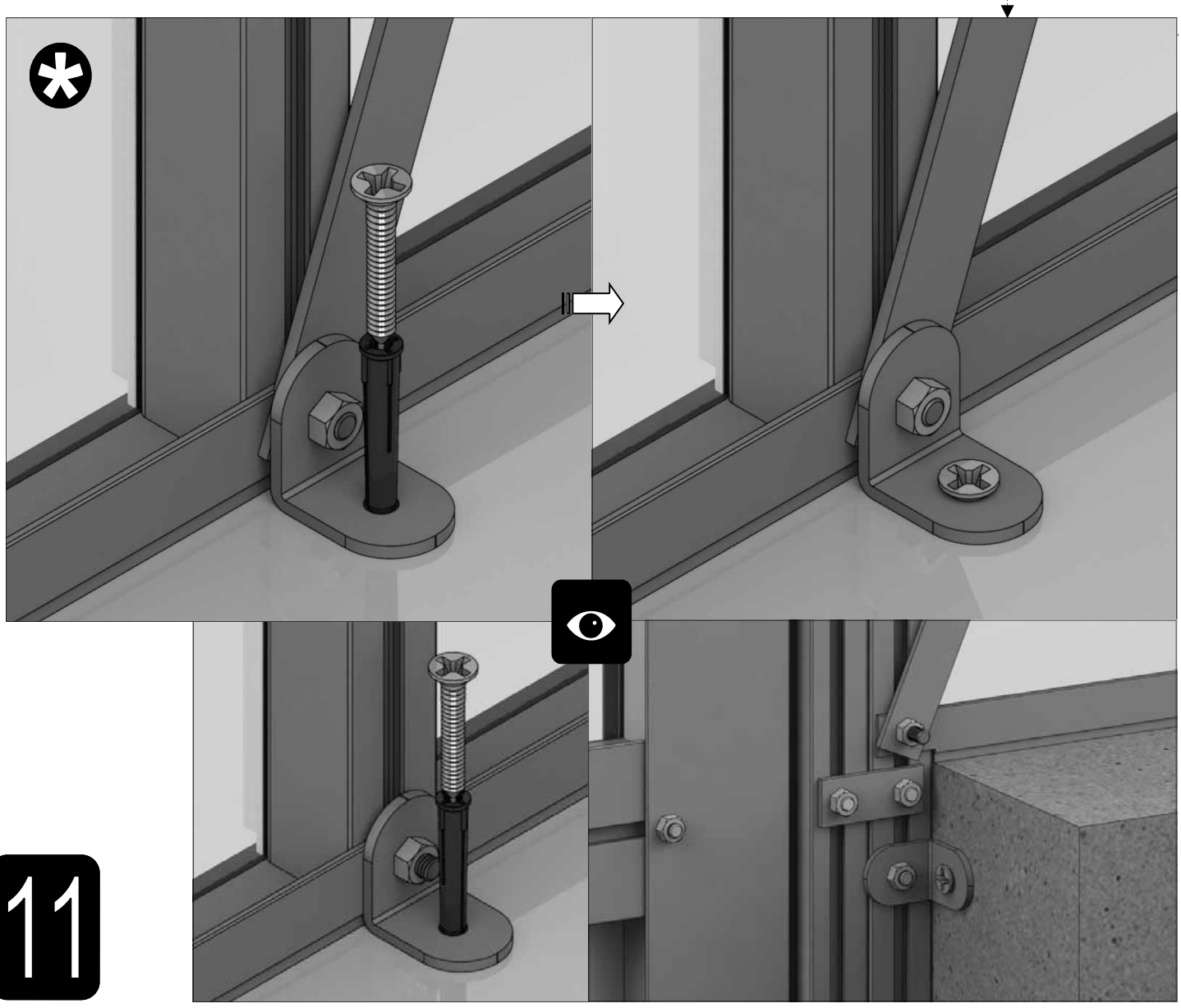

11

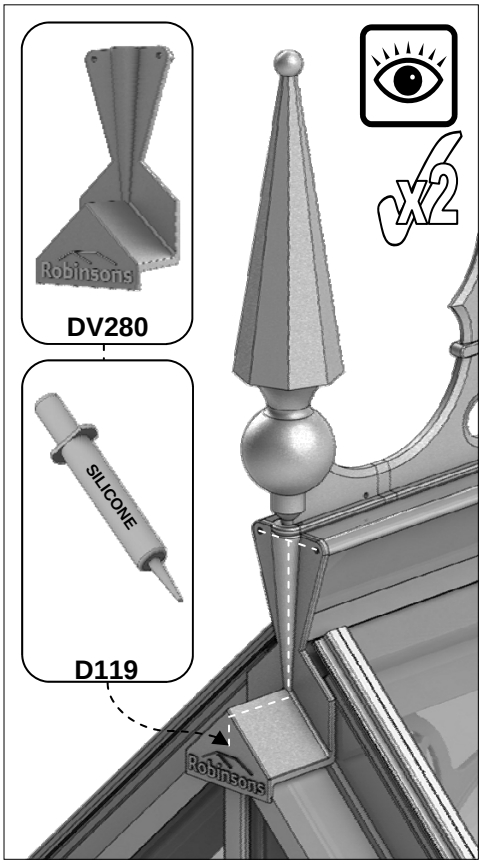
DV280
SILICONE
D119
x2

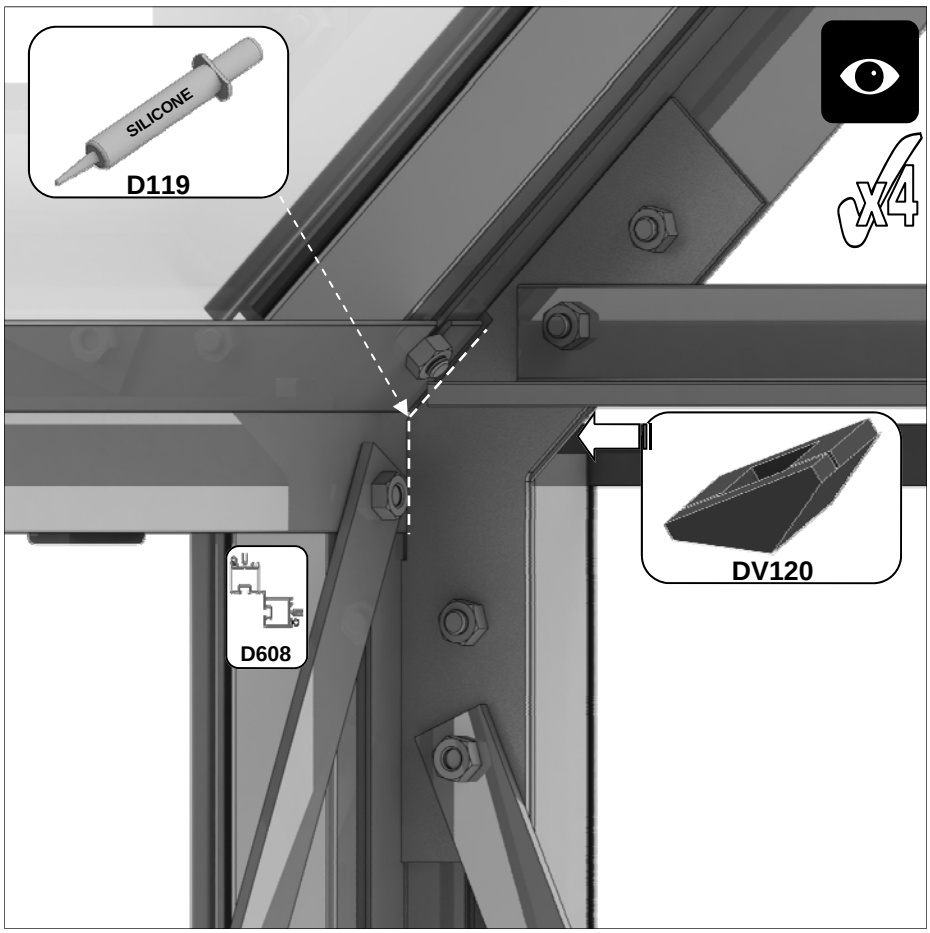
SILICONE
D119
x4
DV120
D608

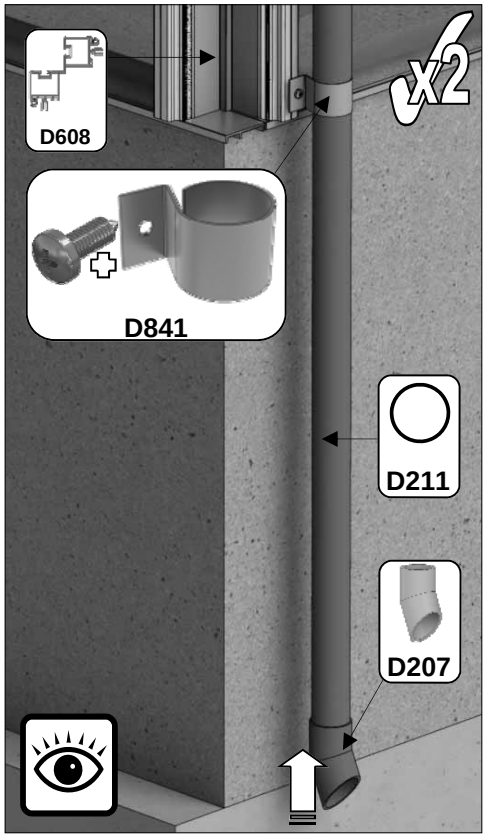
D608
x2
D841
D211
D207

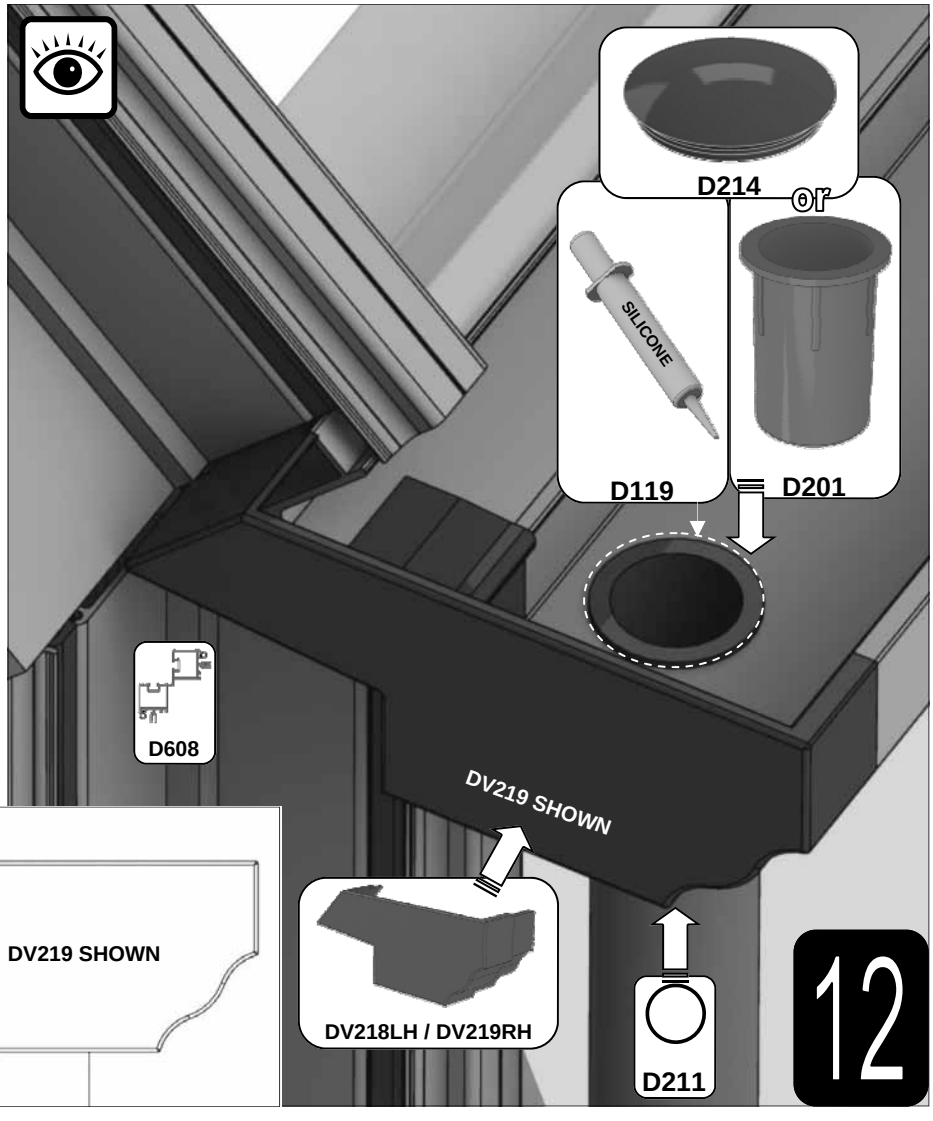
D214
or
SILICONE
D119
D201
D608
DV219 SHOWN
DV218LH / DV219RH
D211
12

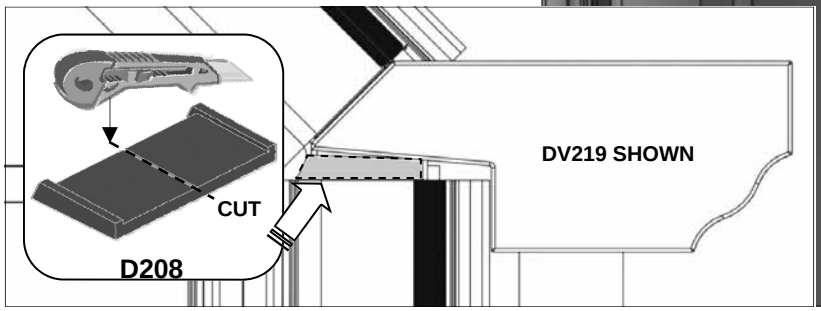
CUT
D208
DV219 SHOWN

Example: 2x 4' 3 slat shelves 'ST0304' = 8' run

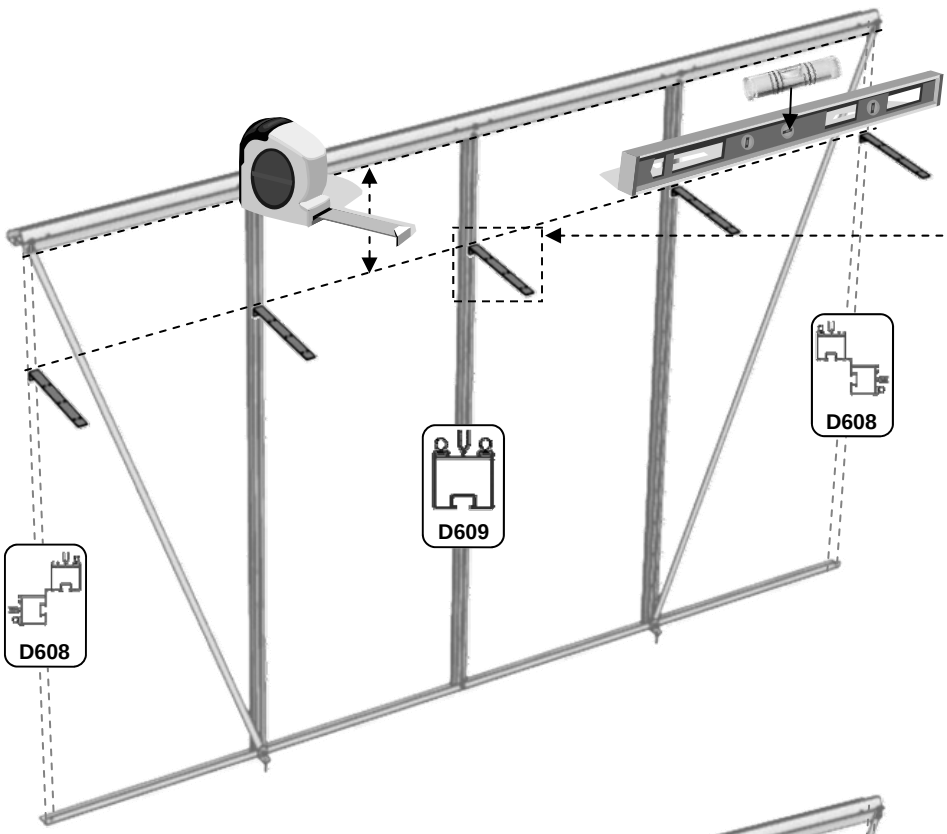

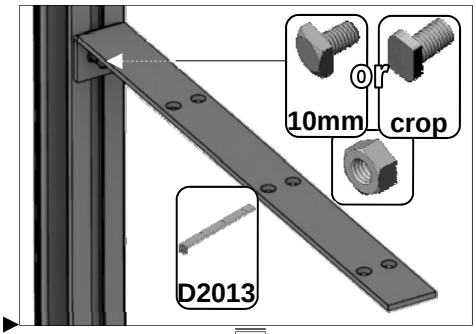

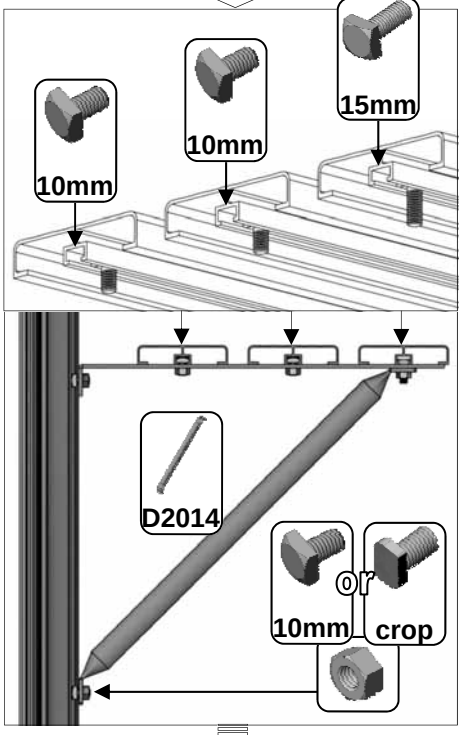

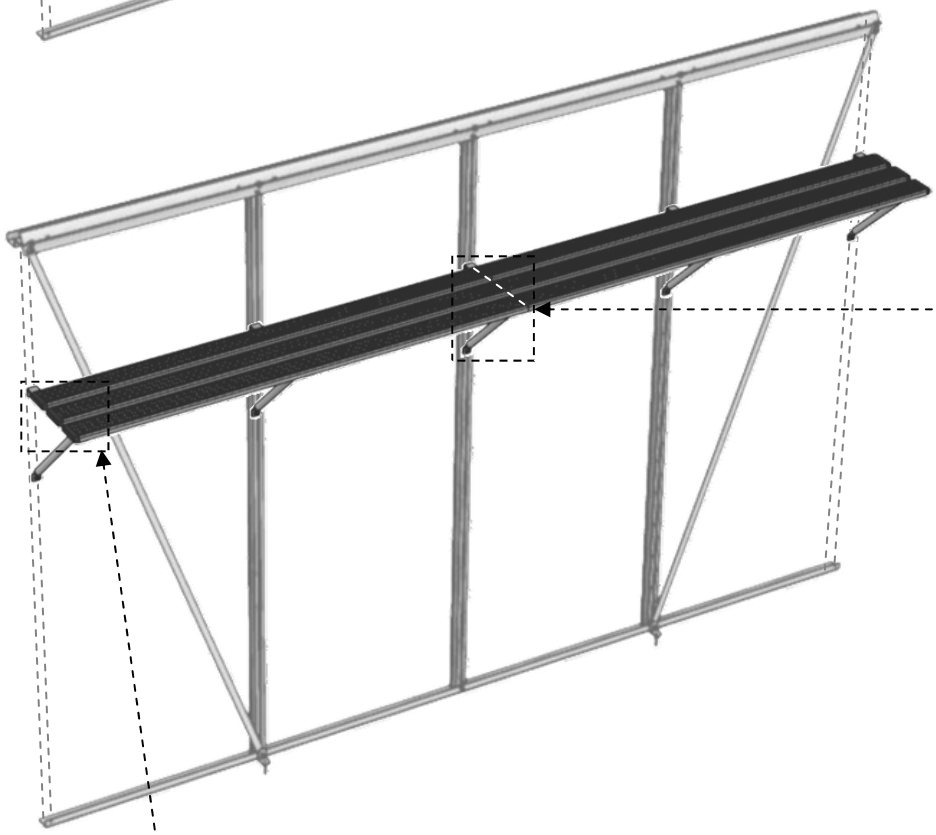

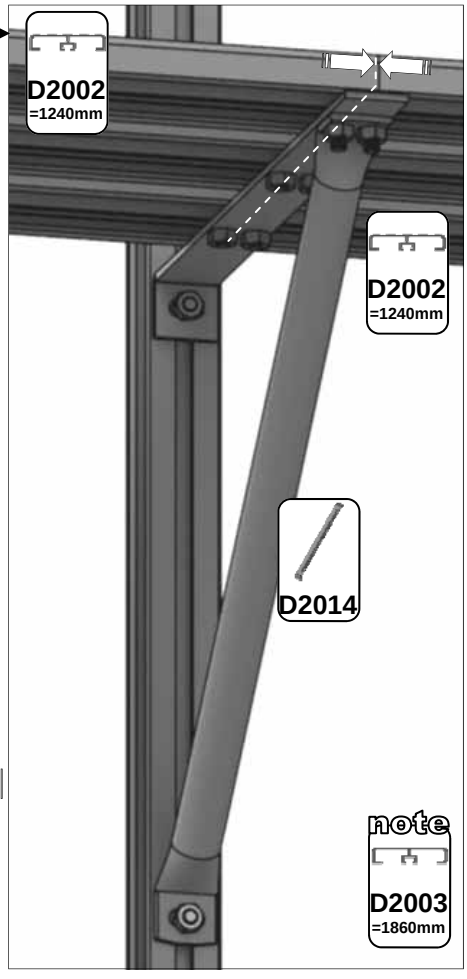

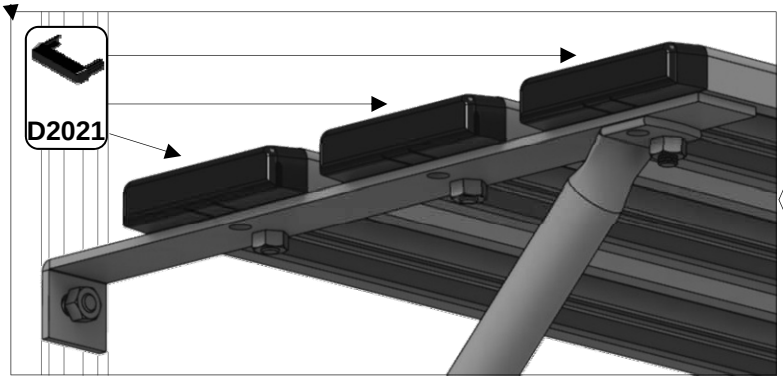

13

Example: 2x 4' 5 slat staging 'ST0504' = 8' run

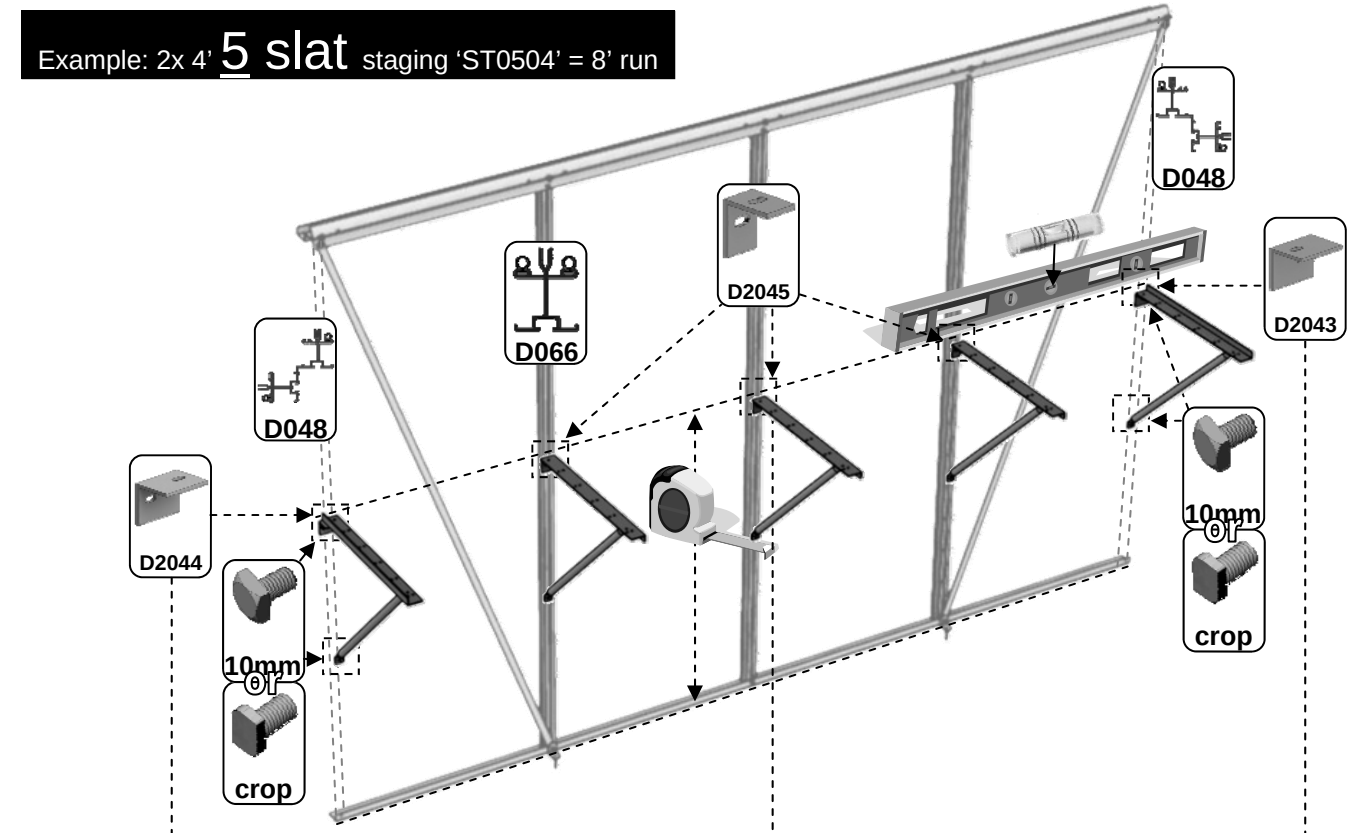

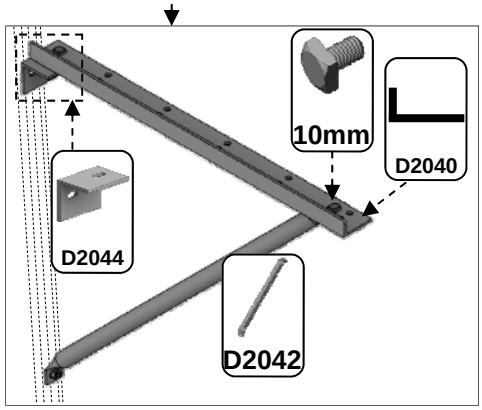

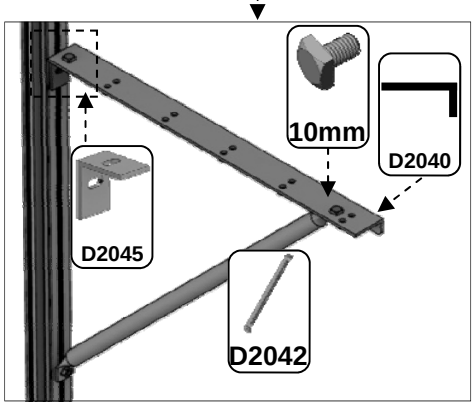

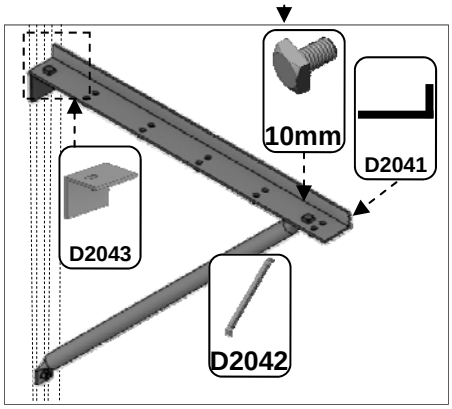

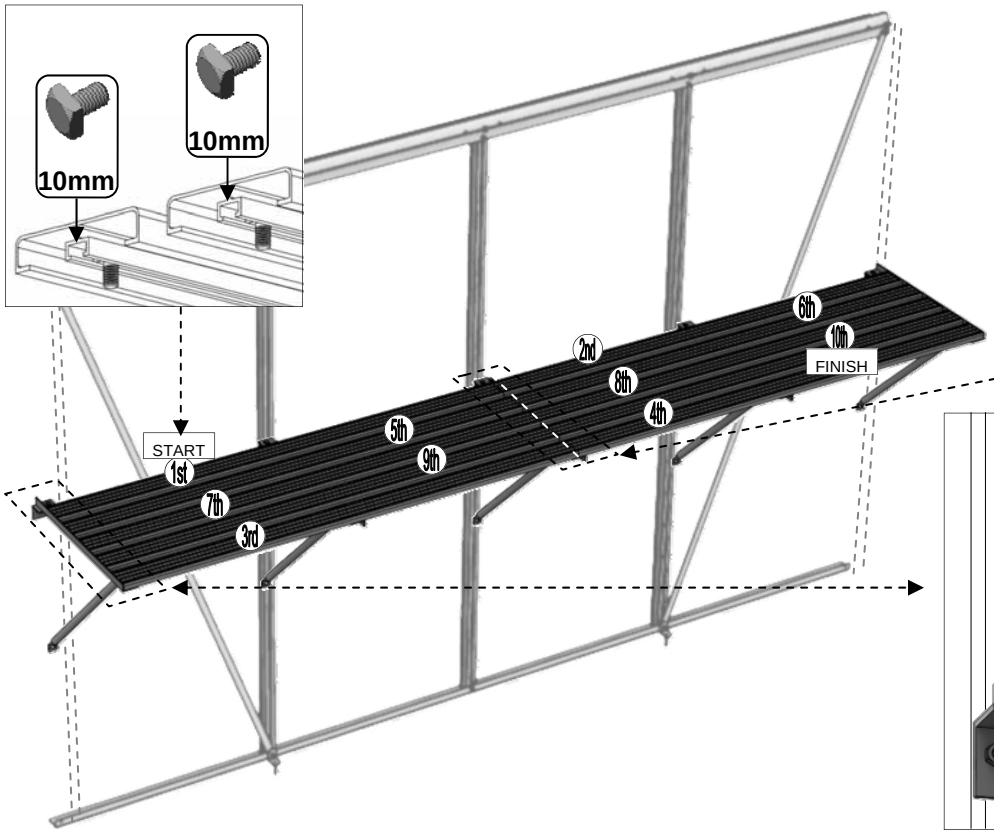

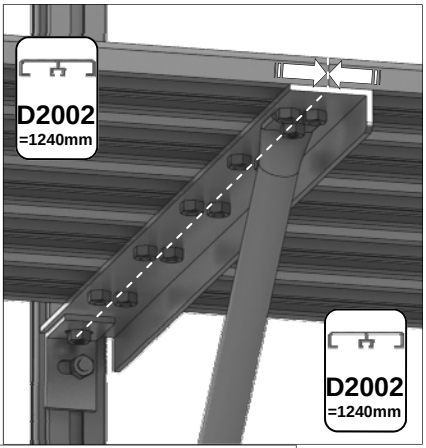

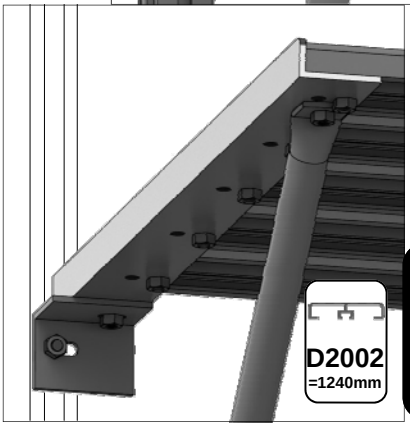

note
D2003
=1860mm

14

Please be aware that this is a new multi-national manual. If you spot any errors or have any constructive comments regarding the manual please email james@thegreenhousepeople.co.uk and I will make the necessary amendments. In addition any photographs of completed buildings would be most appreciated to add to our portfolio.

Here's how you can earn £30 and have your new greenhouse feature in our next brochure….

We are always interested to hear how you went on assembling your greenhouse, and we are particularly interested to see photos of the finished article.

We like to see where you've put it, how you're using it and how it looks in your garden. Often we glean ideas from this which we can pass on to other gardeners as useful tips.

It is always nice if we can include 'real' greenhouse photos in the brochure, so if you send us a photo of your greenhouse to us and it is good enough to get into our next brochure, **we will send you a £30 reward.**

Please send your photos to:
Photo competition
Robinsons Greenhouses
Blythe Park
Cresswell
Stoke-on-Trent
Staffs
ST11 9RD

Or better still, email us on james.durose@greenhousepeople.co.uk

Please write on the reverse of photos your name and address and if you would like them back, please write 'please return' on them too.

We wish you all the best with your new greenhouse, and we look forward to seeing your photos in the near future!

THIS GREENHOUSE BOX WAS PACKED BY: DATE:_____

_____

Robinsons
ALUMINIUM GREENHOUSES

www.robinsonsgreenhouses.co.uk

To contact Robinsons Customer Services email us at sales@robinsonsgreenhouses.co.uk or call us on 01782 385 409.

Our address is Robinsons Greenhouses, Unit 19 Blythe Park, Cresswell, Stoke-on-Trent, Staffordshire, ST11 9RD